20130033

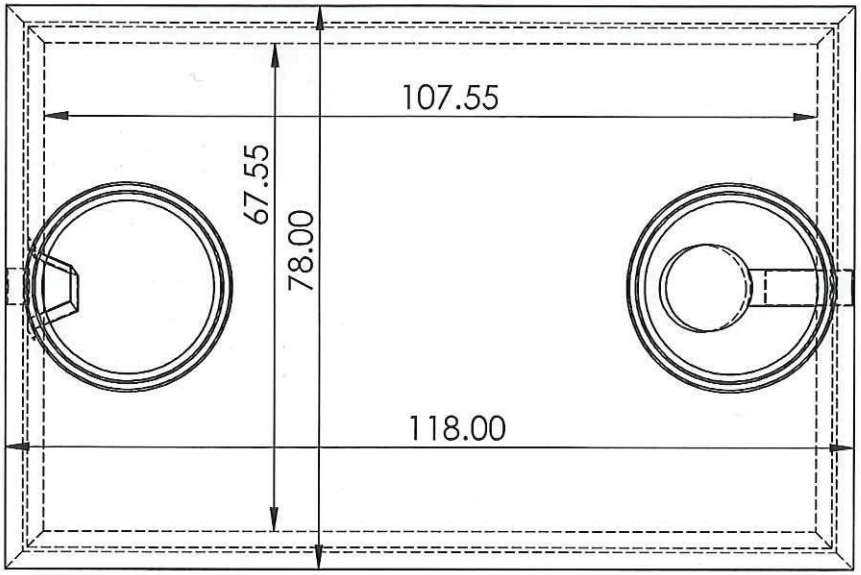

Tank Model 1400

Model 1400 Gallon Septic, Pump, Holding

Dimensions
Length 118"
Width 78"
Height 60"
Below Inlet 47.5"
Tank Weight 8215 lbs
Lid Weight 4794 lbs
Max Depth of Bury 108"

Made and Tested to ASTM C 1227 Standards

1402 Gallons When Used as a Septic Tank
1468.5 Gallons When Used as a Holding Tank
671 GPD Based On 3 Year Service Interval When Used As a Septic Tank

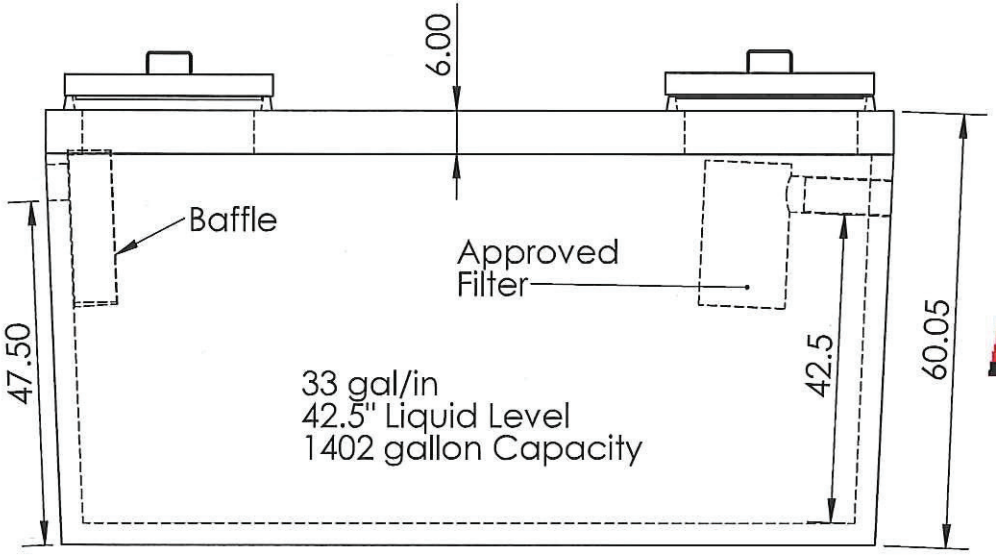

Dalmaray
PRECAST CONCRETE PRODUCTS
"Demand Quality..Demand Dalmaray!"

405 S Arch St
Janesville WI 53548
Ph: 608-752-6507
Fax: 608-752-5671
Toll Free: 888-222-4541
www.dalmarayconcreteproducts.com
sales@dalmarayconcreteproducts.com