WLP1250–P
TANK SPECIFICATIONS

DIMENSIONS:
- WALL: 3"
- BOTTOM: 3"
- COVER: 6"
- MANHOLE: 24" I.D. PRECAST CONCRETE RISER
- HEIGHT: 53" O.D.
- LENGTH: 120" O.D.
- WIDTH: 81–5/8" O.D.
- BELOW INLET: 41" O.D.
- LIQUID LEVEL: 36"
- WEIGHT: 11,888 LBS.

INLET AND OUTLET:
4" CAST–A–SEAL BOOT OR EQUAL

INLET AND OUTLET BAFFLE AND FILTER:
SEE DETAIL #10

LIQUID CAPACITY: 34.98 GAL/IN

LOADING DESIGN: 8' 0" UNSATURATED SOIL

HOLDING TANK:
OUTLET HOLE PLUGGED
ACTUAL CAPACITY: 1329 GALLONS

TANK CAN BE USED AS:
SEPTIC/ HOLDING/ PUMP OR SIPHON

COVER: MIX DESIGN #8 (NO FIBER)
TANK: MIX DESIGN #9 (SMALL FIBER)

CUSTOMIZED TANKS:
FOR CUSTOM TANKS CONTACT WIESER CONCRETE

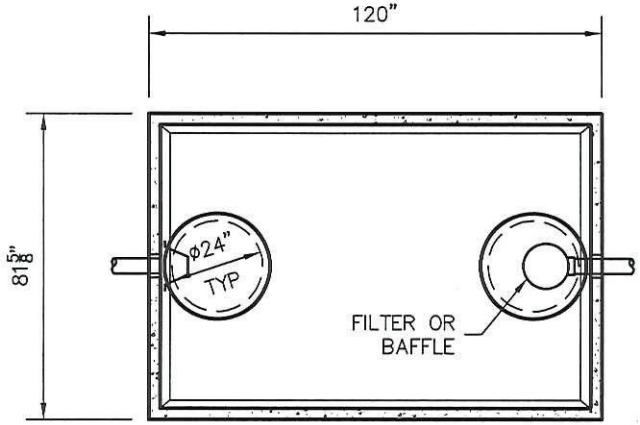

TOP VIEW

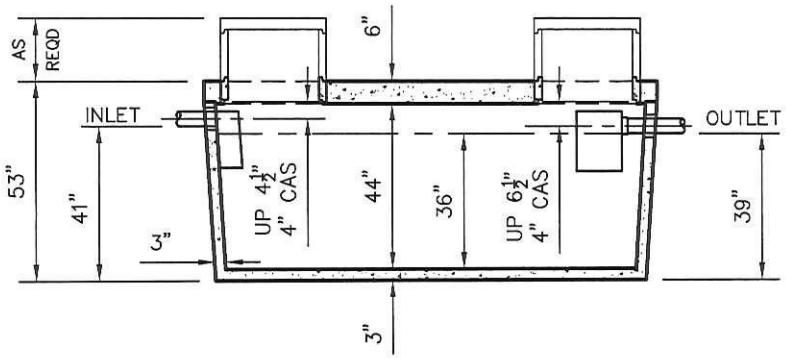

SIDE VIEW

TANKS ARE MANUFACTURED TO MEET OR EXCEED ASTM C–1227 REQUIREMENTS

Conditionally APPROVED

SEE CORRESPONDENCE

20130152 A

RECEIVED
MAY 13 2013
SAFETY & BUILDINGS

DRAWINGS SUBMITTED FOR APPROVAL
APPROVED BY: _____
APPROVAL DATE: _____
PRODUCTS NEEDED BY: _____

PRE–POUR:
POST–POUR:
SCALE: 1/4"=1'–0"
REV.
DATE: .
DRAWN BY: WCP
DATE: 00/00/00
FILE: WLP1250–P

WIESER CONCRETE
W3716 US HWY 10 MAIDEN ROCK, WI 54750
800–325–8456

WLP1250–P
SEPTIC MANUAL

SHEET NO. 1 OF 1