20130210 B

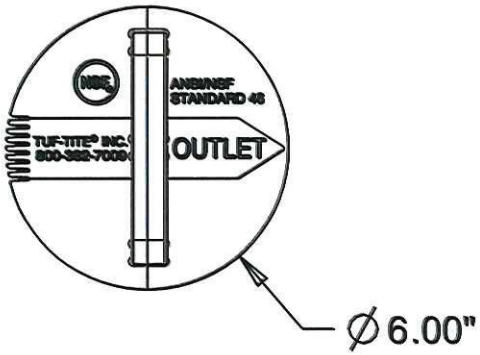

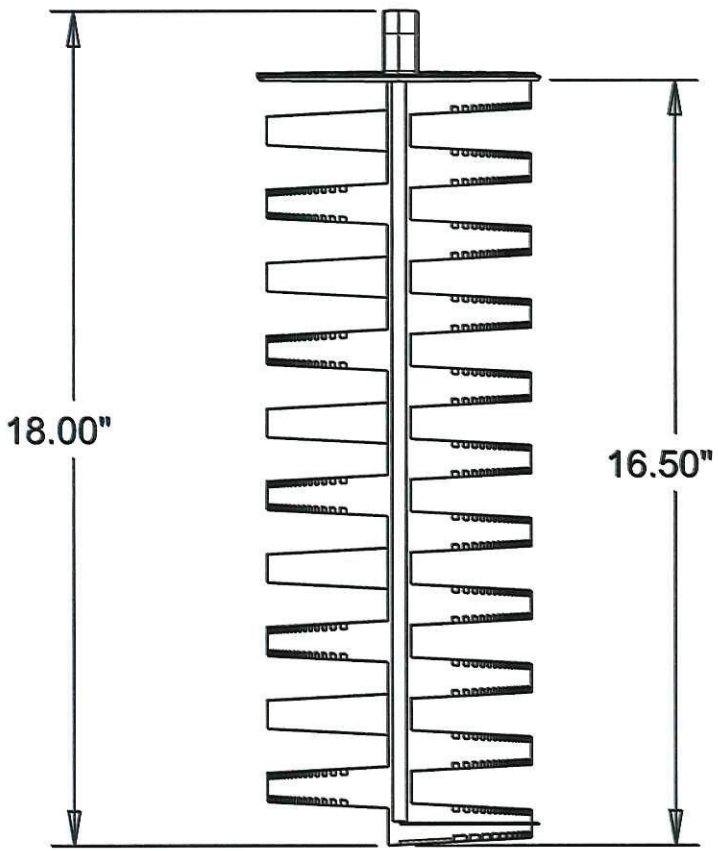

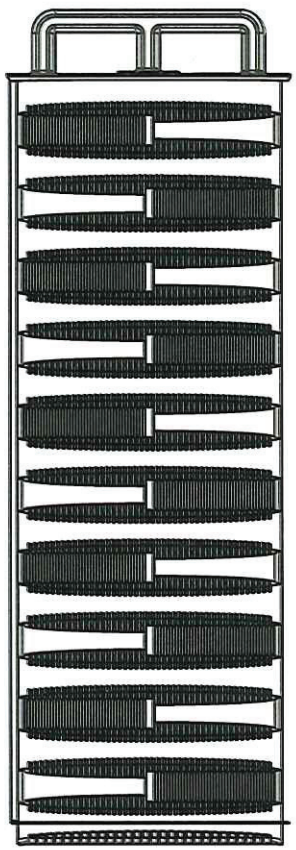

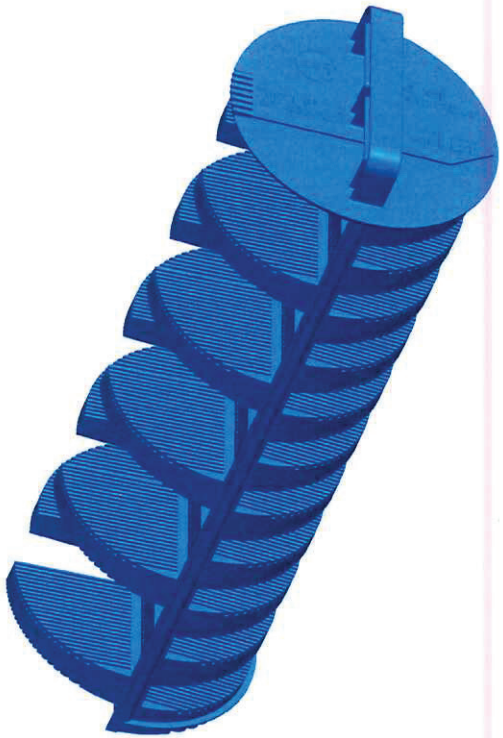

RECEIVED
JUN 22 2013
SAFETY & BUILDINGS

Material: High-Impact Polypropylene
Color: Blue

TUF-TITE®

Drainage and Septic Products

Tuf-Tite, Inc.
1200 Flex Court
Lake Zurich, Illinois 60047

TELEPHONE: 847.550.1011
TOLL FREE: 800.382.7009
FAX: 847.550.8004

PART NAME: 6" EFFLUENT FILTER

PART #: EF-6

20130210B

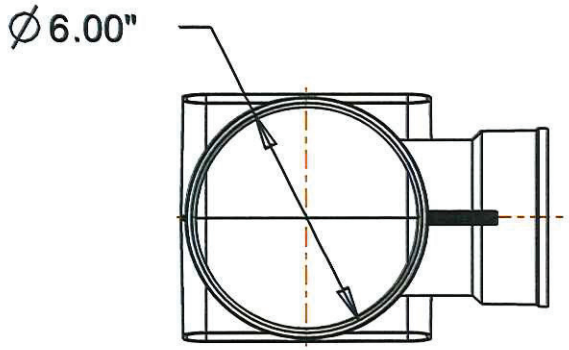

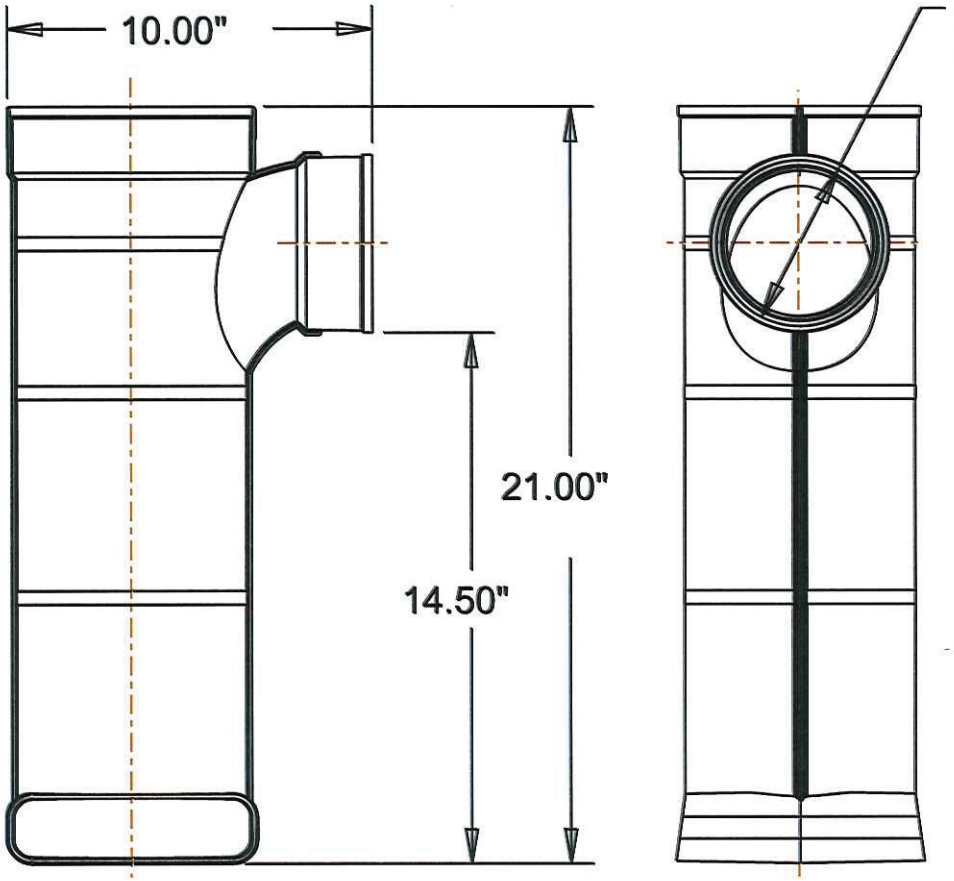

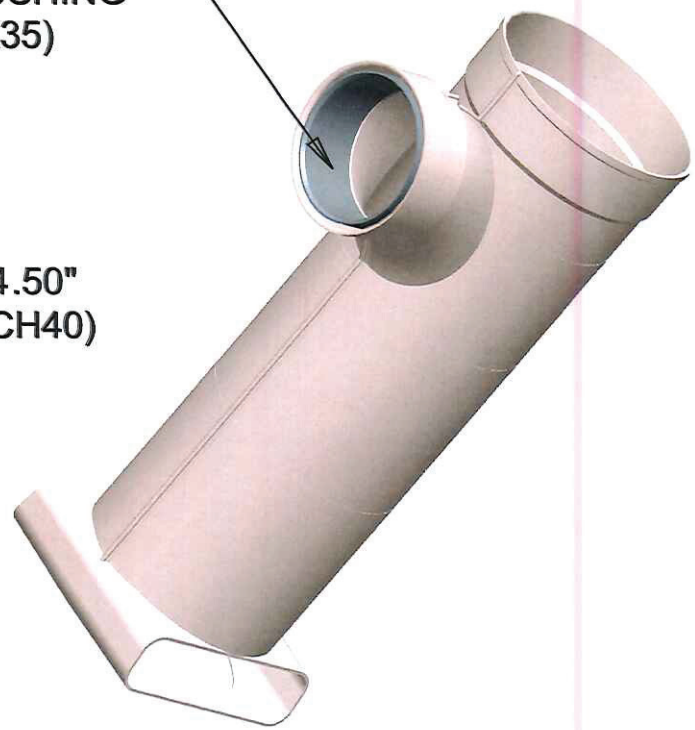

RECEIVED
JUN 22 2013
SAFETY & BUILDINGS

Material: High-Impact ABS
Color: White

TUF-TITE

Drainage and Septic Products

Tuf-Tite, Inc.
1200 Flex Court
Lake Zurich, Illinois 60047

TELEPHONE: 847.550.1011
TOLL FREE: 800.382.7009
FAX: 847.550.8004

PART NAME: 6" T-BAFFLE

PART #: TB-6