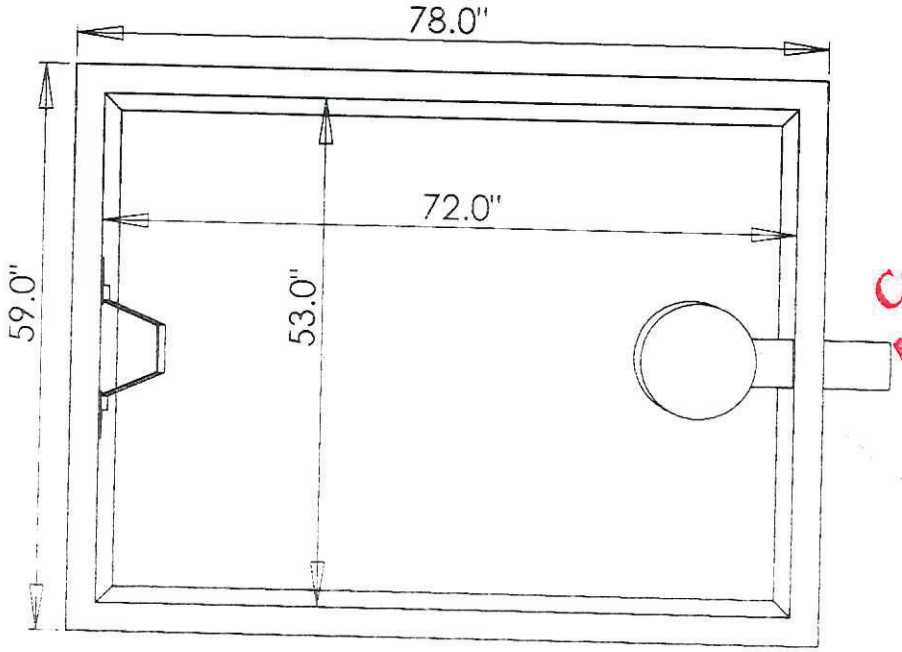

Dalmaray Concrete Products Inc.

Tank Model 600

Conditionally APPROVED
SEE CORRESPONDENCE

Model 600 Septic, Holding, Sedimentation, Pump, or Siphon

642 gal. septic
672 gal. holding

300 GPD WHEN USED AS A SEPTIC TANK BASED ON A 3 YR SERVICE INTERVAL

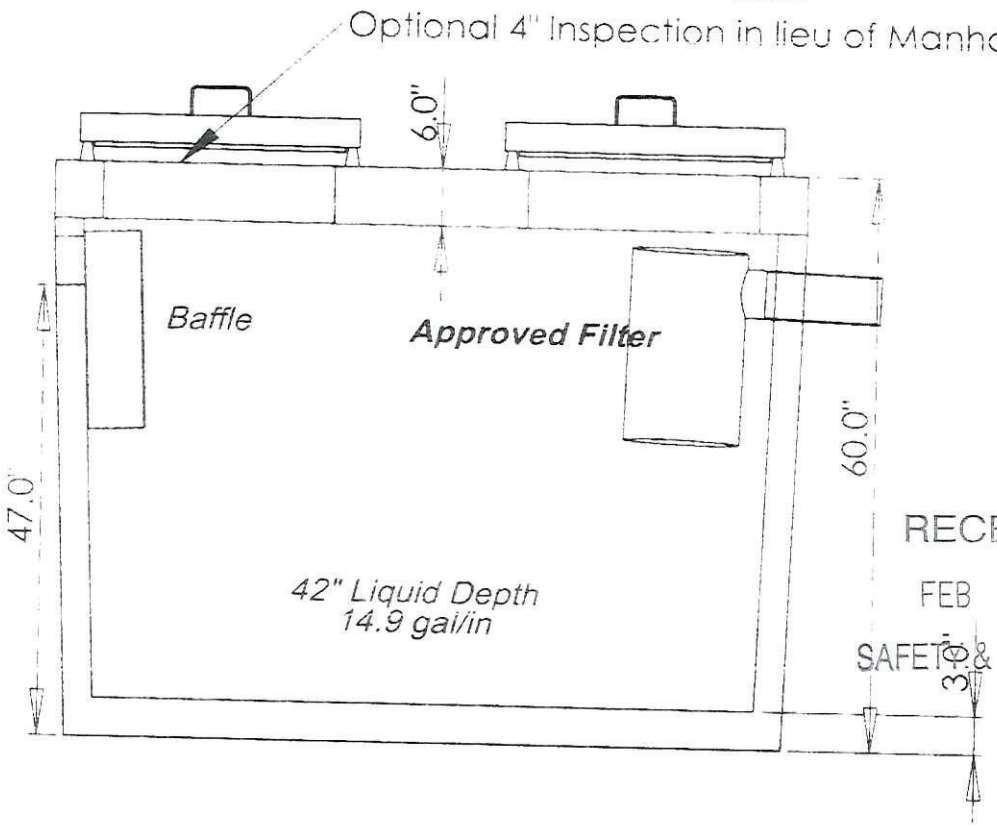

DIMENSIONS:
LENGTH - 78"
WIDTH - 59"
HEIGHT - 60"
BELOW INLET - 47"
TANK WEIGHT - 4600 lb.
LID WEIGHT - 2400 lb.
MAX DEPTH OF BURY 108"

20140047

RECEIVED
FEB 4 2014
SAFETY & BUILDINGS

Dalmaray Concrete Products Inc.
405 S. Arch St.
Janesville, WI 53548
(608)-752-6507
Toll Free:(888)-222-4541
www.dalmarayconcreteproducts.com
sales@dalmarayconcreteproducts.com