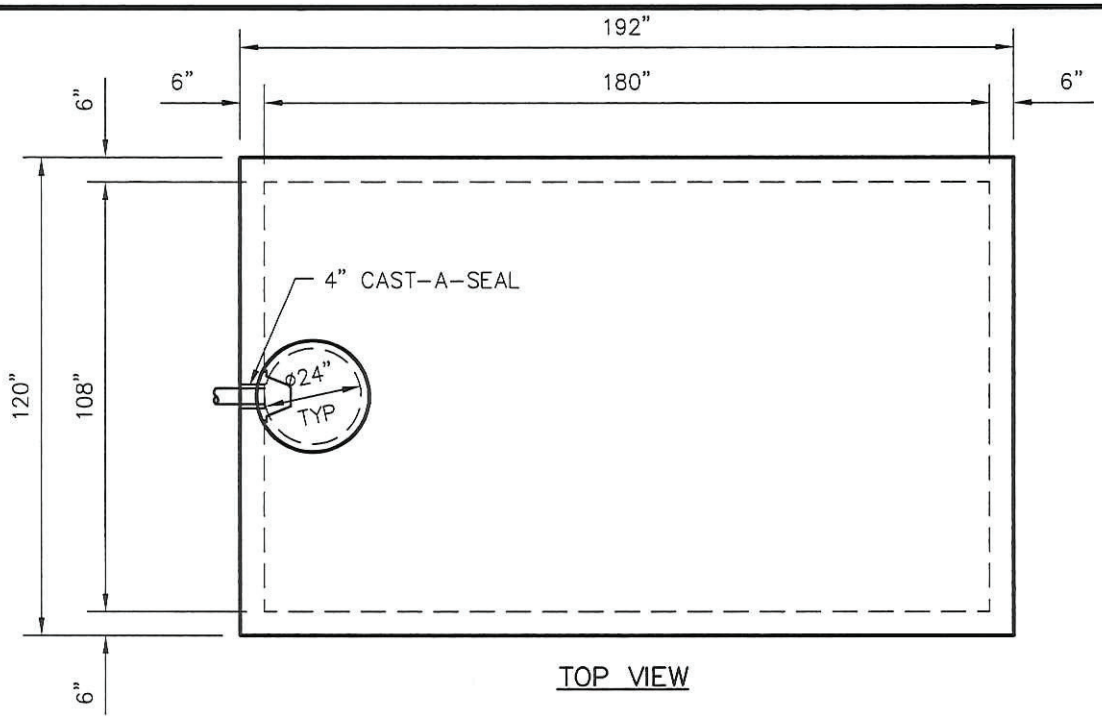

TOP VIEW

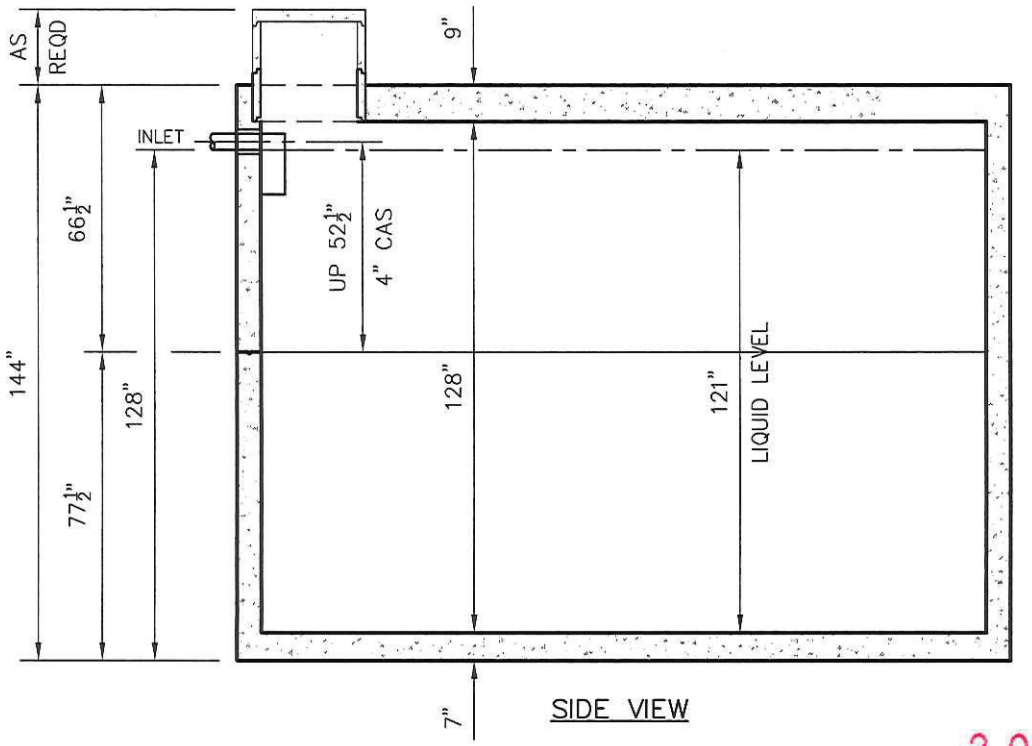

SIDE VIEW

WEHD10000
HOLDING
TANK SPECIFICATIONS

DIMENSIONS:

WALL: 6"
BOTTOM: 7"
TOP: 9"
MANHOLE: 24" I.D. PRECAST CONCRETE RISER
HEIGHT: 144" O.D.
LENGTH: 192" O.D.
WIDTH: 120" O.D.
BELOW INLET: 128" O.D.
LIQUID LEVEL: 119"
WEIGHT: 35,975 LBS PER SECTION

INLET AND OUTLET:
4" CAST-A-SEAL BOOT, GASKET OR EQUAL

INLET AND OUTLET BAFFLE AND FILTER:
WISCONSIN, SEE DETAIL #10

LIQUID CAPACITY: 84.15 GAL/IN

HOLDING TANK:
OUTLET HOLE PLUGGED
ACTUAL CAPACITY: 10,182 GALLONS

LOADING DESIGN: 12'-0" UNSATURATED SOIL/HS-20

TANK CAN BE USED AS:
HOLDING

TANK: MIX DESIGN #8 (NO FIBER)

Conditionally
APPROVED
SEE CORRESPONDENCE

DRAWINGS SUBMITTED
FOR APPROVAL

APPROVED BY: _____
APPROVAL DATE: _____
PRODUCTS NEEDED BY: _____

20140056

PRE-POUR:
POST-POUR:
SCALE: 1/4"=1'-0"
REV.
DATE:
DRAWN BY: WCP
DATE: 00/00/00
FILE: WEHD10000

WIESER CONCRETE
W3716 US HWY 10 MAIDEN ROCK, WI 54750
800-325-8456

WEHD10000
SEPTIC MANUAL

SHEET NO.
1 OF 1

WEHD10000
SEPTIC/PUMP OR SIPHON
TANK SPECIFICATIONS

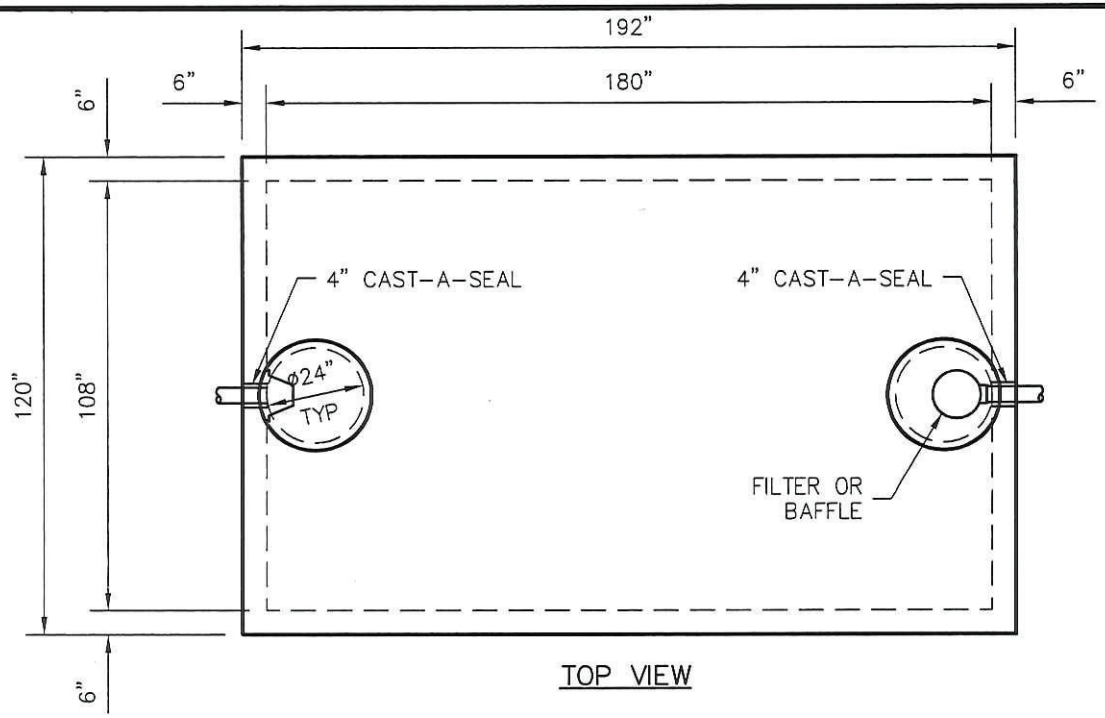

TOP VIEW

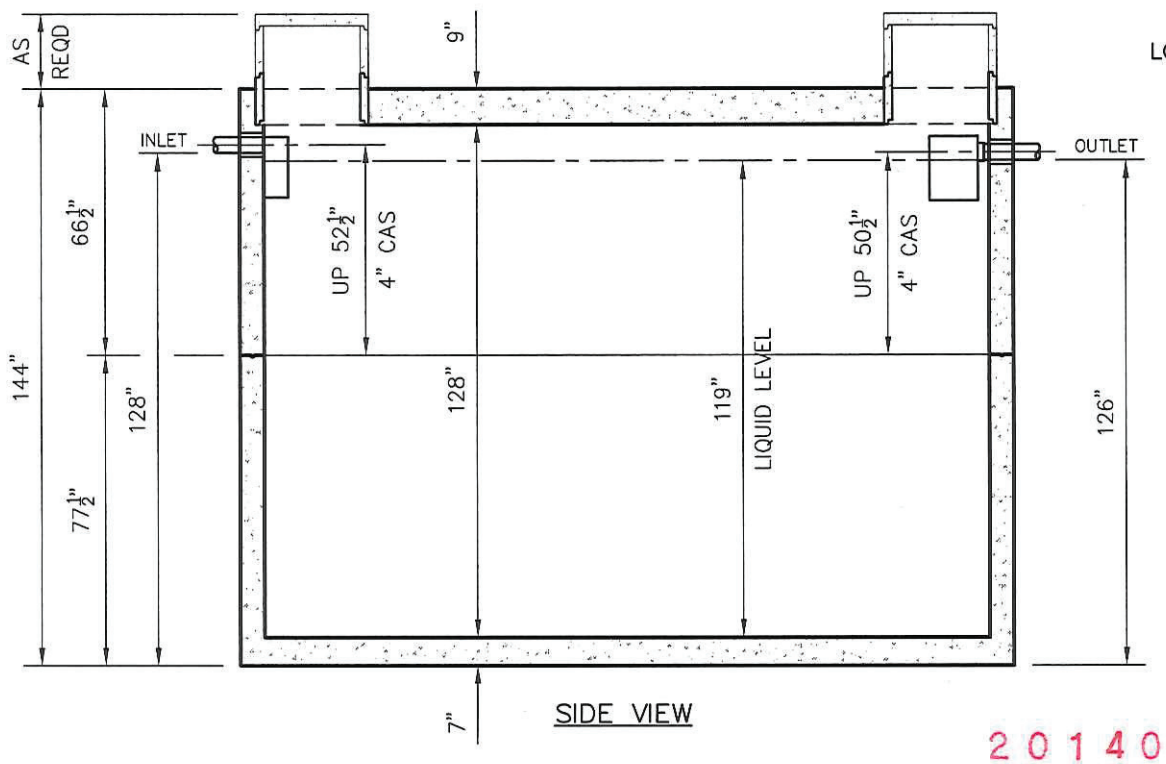

SIDE VIEW

DIMENSIONS:

WALL: 6"
BOTTOM: 7"
TOP: 9"
MANHOLE: 24" I.D. PRECAST CONCRETE RISER
HEIGHT: 144" O.D.
LENGTH: 192" O.D.
WIDTH: 120" O.D.
BELOW INLET: 128" O.D.
LIQUID LEVEL: 119"
WEIGHT: 35,975 LBS PER SECTION

INLET AND OUTLET:
4" CAST-A-SEAL BOOT, GASKET OR EQUAL

INLET AND OUTLET BAFFLE AND FILTER:
WISCONSIN, SEE DETAIL #10

LIQUID CAPACITY: 84.15 GAL/IN

LOADING DESIGN: 12'-0" UNSATURATED SOIL/HS-20

TANK CAN BE USED AS:
SEPTIC/PUMP OR SIPHON

TANK: MIX DESIGN #8 (NO FIBER)

Conditionally
APPROVED
SEE CORRESPONDENCE

20140056

DRAWINGS SUBMITTED
FOR APPROVAL

APPROVED BY: _____
APPROVAL DATE: _____
PRODUCTS NEEDED BY: _____

PRE-POUR:
POST-POUR:
SCALE: 1/4"=1'-0"
REV.
DATE:
DRAWN BY: WCP
DATE: 00/00/00
FILE: WEHD10000

WIESER CONCRETE
W3716 US HWY 10 MAIDEN ROCK, WI 54750
800-325-8456

WEHD10000
SEPTIC MANUAL

SHEET NO. 1 OF 1

20140056

DETAIL 10
WISCONSIN BAFFLE AND FASTENER DETAIL

SEE BAFFLE CHART FOR OTHER STATES

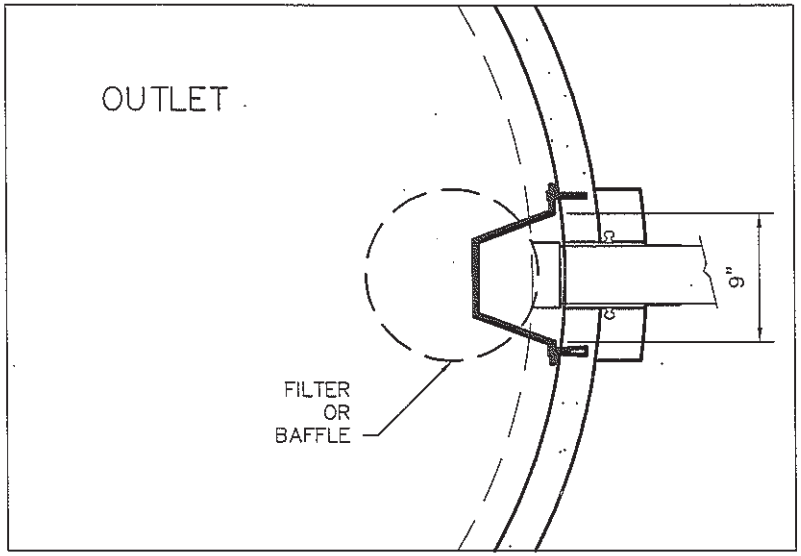

TOP VIEW

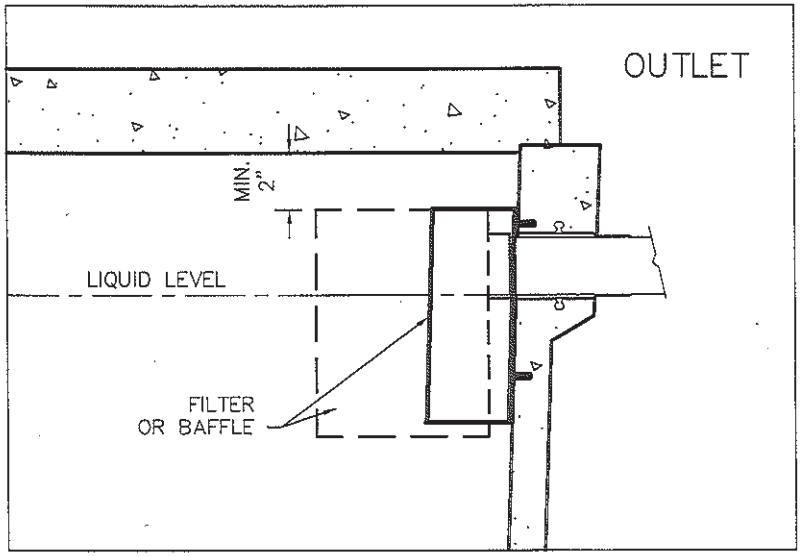

SIDE VIEW

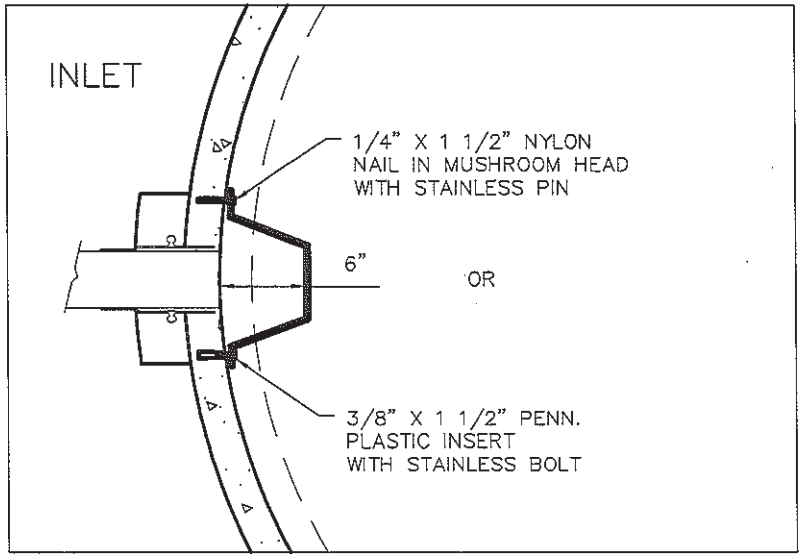

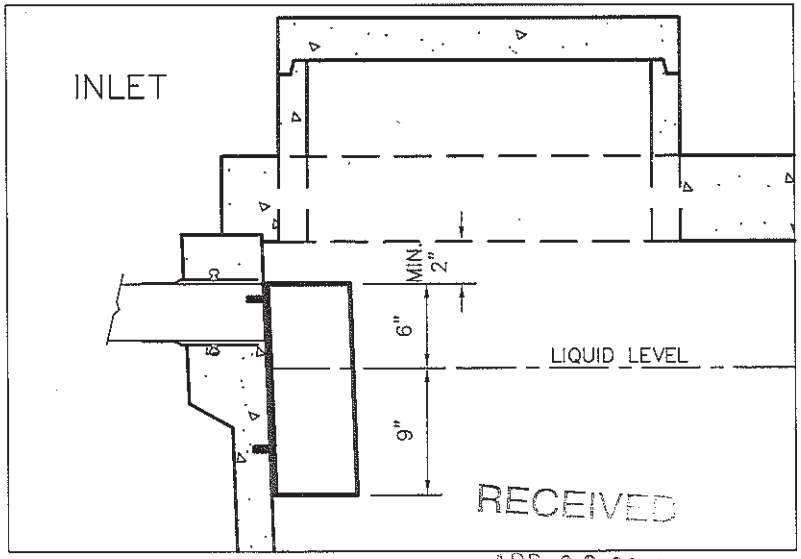

RECEIVED
APR 09 2014
SAFETY & BUILDINGS

PRE-POUR:
POST-POUR:
SCALE: NTS
REV.
DATE:
DRAWN BY: WCP
DATE: 00/00/00
FILE: SHEET 10

WIESER CONCRETE
W3716 US HWY 10 MAIDEN ROCK, WI 54750
800-325-8456

WISCONSIN BAFFLE AND FASTENER DETAIL
SEPTIC MANUAL

SHEET NO. 1 OF 1