~~20110107~~ 20140138 Add Holding

~~20110107~~

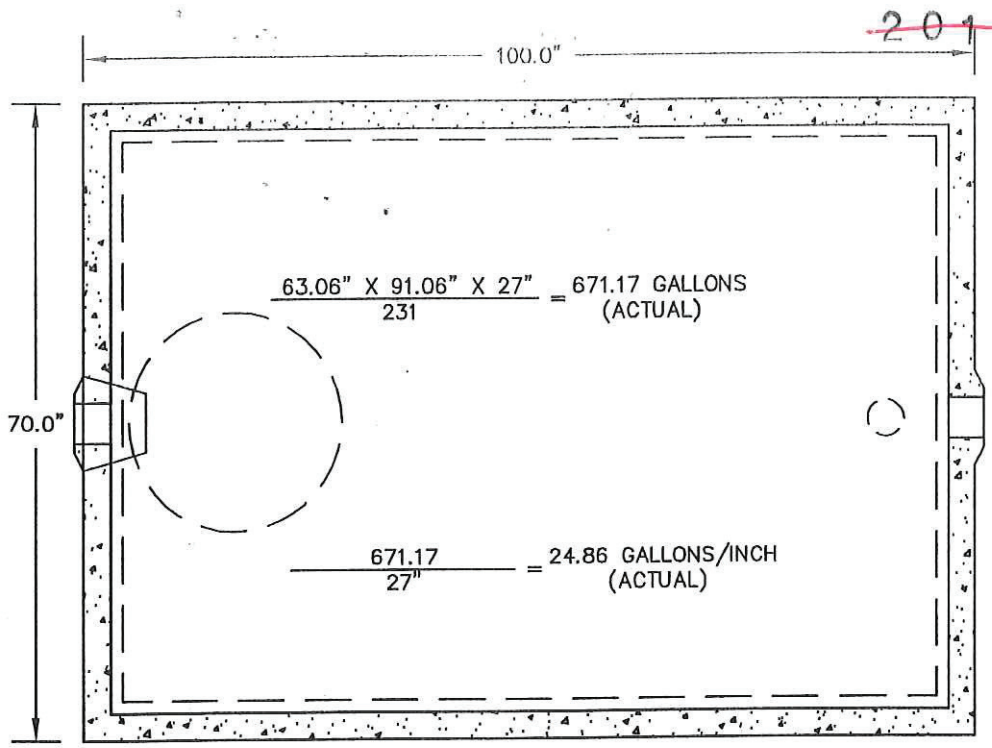

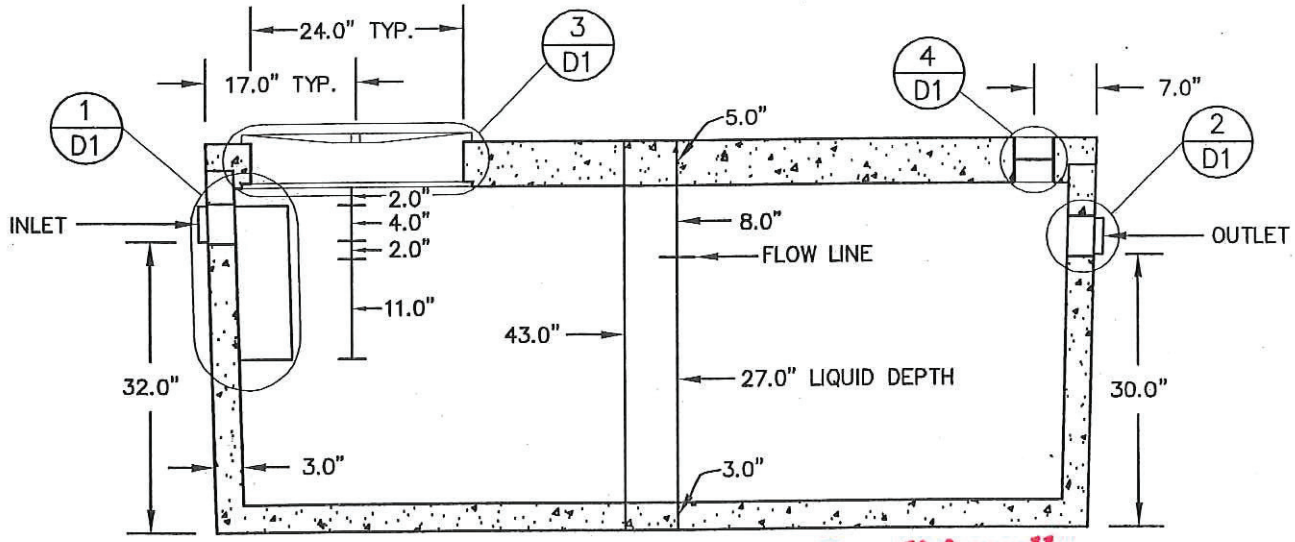

Conditionally APPROVED
DEPARTMENT OF COMMERCE
DIVISION OF SAFETY AND BUILDINGS
FILE # 20090164
G.P.D. = 321 GALLONS
WEIGHT = 6,000 LBS.
SEE CORRESPONDENCE

GENERAL NOTES:

1.) ALL TANKS ARE EFFLUENT FILTER COMPATABLE.
2.) OUTLET BAFFLES ONLY SUPPLIED PER REQUEST.
3.) 4" AND 6" MULTIPLE OPENINGS ARE AVAILABLE.
4.) NOTIFY WHEN DEPTH OF BURY IS GREATER THAN 72".
5.) 24" AND 30" MANHOLE OPENINGS ARE AVAILABLE.
6.) NOTIFY WHEN INSTALLING IN EXTREME WET CONDITIONS.

ONEIDA CONCRETE PRODUCTS
RHINELANDER, WI (800) 236-3124

PUMP CHAMBER – 650 GALLON

02/09/10