WLP1000/650-FDL
TANK SPECIFICATIONS

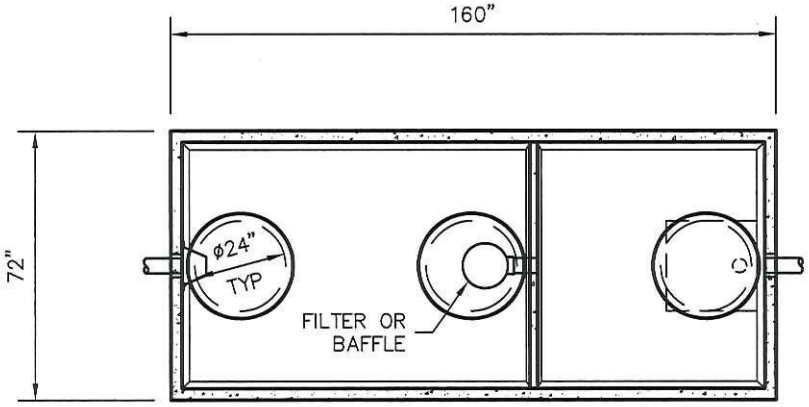

TOP VIEW

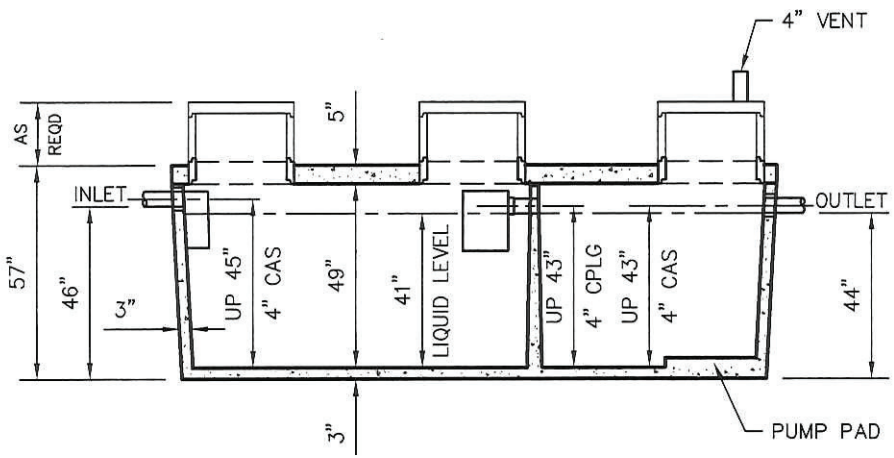

SIDE VIEW

DIMENSIONS:
- WALL: 3"
- BOTTOM: 3"
- COVER: 5"
- MANHOLE: 24" I.D. PRECAST CONCRETE RISER
- HEIGHT: 57"
- LENGTH: 160" O.D.
- WIDTH: 72" O.D.
- BELOW INLET: 46" O.D.
- LIQUID LEVEL: 41"
- WEIGHT: 15,000 LBS.

INLET AND OUTLET:
4" CAST-A-SEAL BOOT OR EQUAL

INLET AND OUTLET BAFFLE AND FILTER:
SEE DETAIL #10

LIQUID CAPACITY: 24.74 GAL/IN (SEPTIC)
15.93 GAL/IN (PUMP)

LOADING DESIGN: 8' 0" UNSATURATED SOIL

TANK CAN BE USED AS:
SEPTIC/SEPTIC, SEPTIC/PUMP
OR SEPTIC/SIPHON

COVER: MIX DESIGN #8 (NO FIBER)
TANK: MIX DESIGN #9 (SMALL FIBER)

CUSTOMIZED TANKS:
FOR CUSTOM TANKS CONTACT WIESER CONCRETE

Conditionally
APPROVED
SEE CORRESPONDENCE
20140161

DRAWINGS SUBMITTED FOR APPROVAL
APPROVED BY: _____
APPROVAL DATE: _____
PRODUCTS NEEDED BY: _____

TANKS ARE MANUFACTURED TO MEET OR EXCEED ASTM C-1227 REQUIREMENTS

PRE-POUR:
POST-POUR:
SCALE: 1/4"=1'-0"
REV.
DATE:
DRAWN BY: WCP
DATE: 00/00/00
FILE: WLP1000-650 FDL

WIESER CONCRETE
W3716 US HWY 10 MAIDEN ROCK, WI 54750
800-325-8456

WLP1000/650-FDL
SEPTIC MANUAL

SHEET NO. 1 OF 1