** 3,100 Holding Tank Only **

** No Outlet **

2,870 Gallon = 46.30 Gal. / 1"

This Tank is Designed for use as: Septic , Pump, Grease Interceptor, Holding Tank, and or combination of the listed.

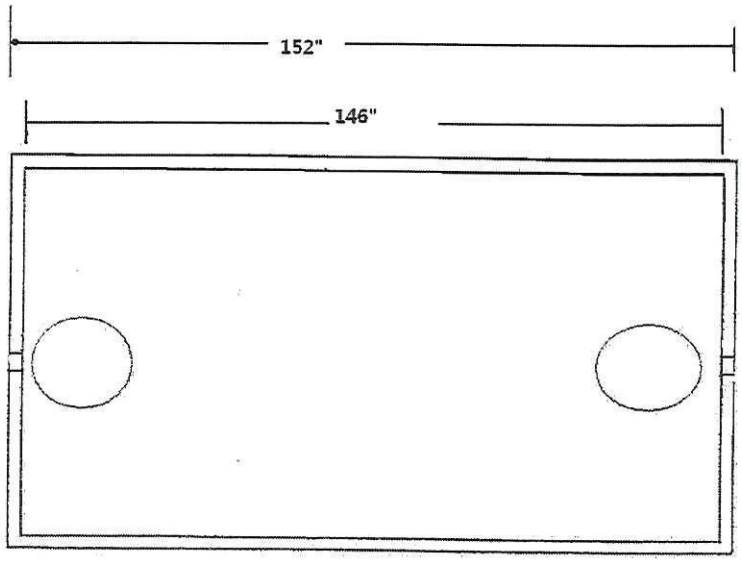

* All Concrete Meets Min. 4,000 PSI, W/C , <0.45
* All Joints sealed with Concrete Sealants C/S 101 or Equal
* 5' Max Depth of Cover with Sandard Cover, Heavy Duty Available Up To 8' Burial Depth.
*All Baffles & Filters to beInstalled to meet State and Local Code.
*All Inverts to be "Cast A Seal" or Equal 4" or 6"
* For Modifications Contact Grove Concrete
*Total Weight 21,700LBS (Standard Lid Thickness)
* All Manholes 24" Minimum I.D.

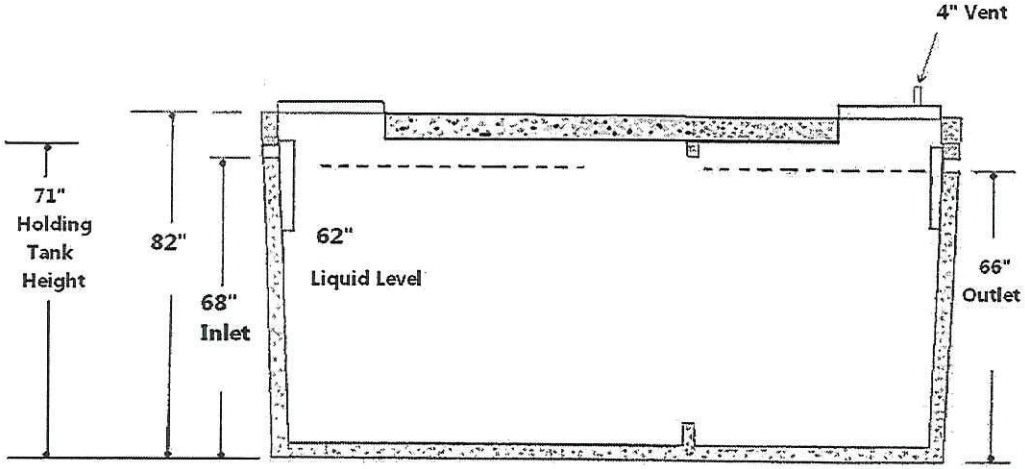

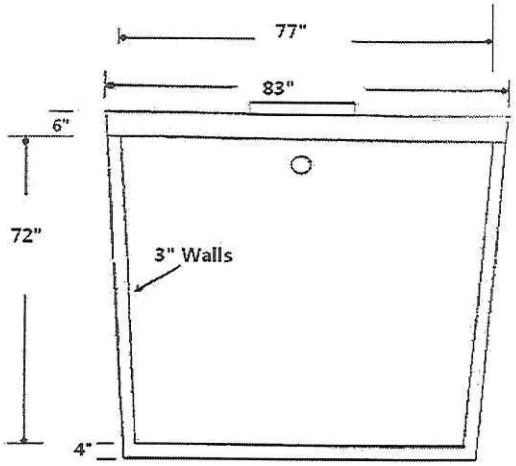

Conditionally
APPROVED
DEPARTMENT OF COMMERCE
DIVISION OF SAFETY AND BUILDINGS
SEE CORRESPONDENCE

~~20100096~~
20140324

Product # 3100 -2870

Grove Concrete & Supply INC.

18426 Durand Ave. Po Box 363
Union Grove, Wi. 53182
Ph. 262-878-2030 Fax 262-878-4222
GroveConcrete.com