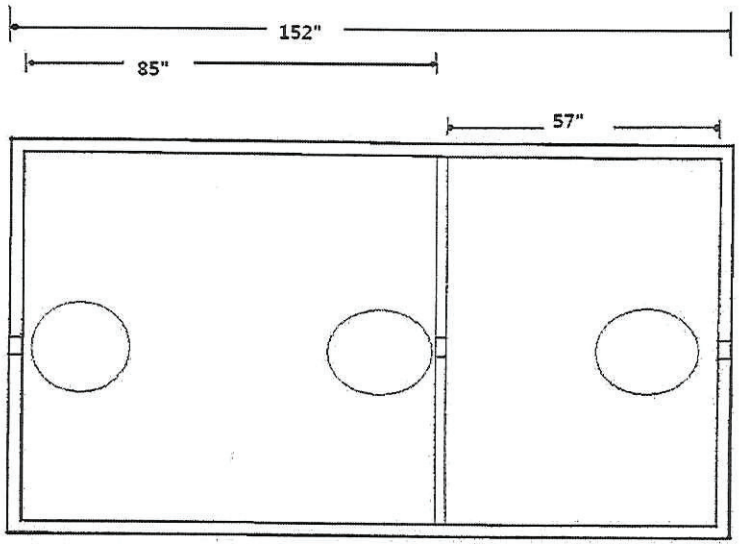

This Tank is Designed for use as: Septic , Pump, Grease Interceptor, Holding Tank, and or combination of the listed.

* All Concrete Meets Min. 4,000 PSI, W/C , <0.45
* All Joints sealed with Concrete Sealants C/S 101 or Equal
* 5' Max Depth of Cover with Sandard Cover, Heavy Duty Available Up To 8' Burial Depth.
*All Baffles & Filters to be Installed to meet State and Local Code.
*All Inverts to be "Cast A Seal" or Equal 4" or 6"
* For Modifications Contact Grove Concrete
*Total Weight 21,700LBS (Standard Lid Thickness)
* All Manholes 24" Minimum I.D.

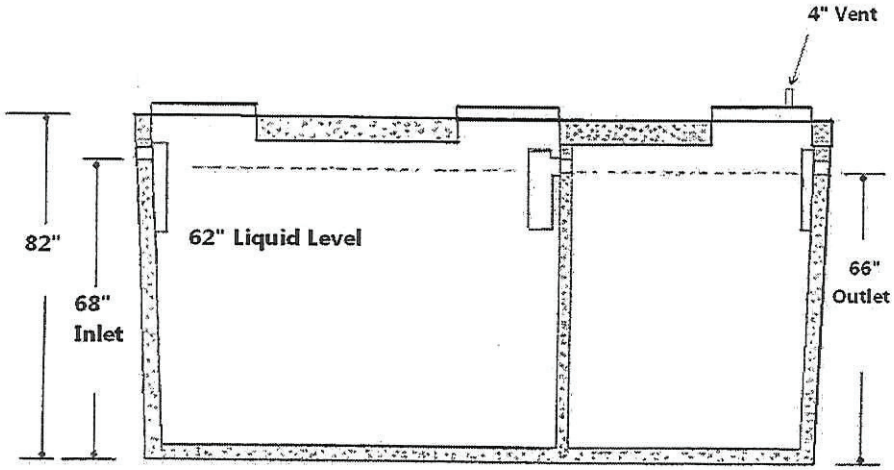

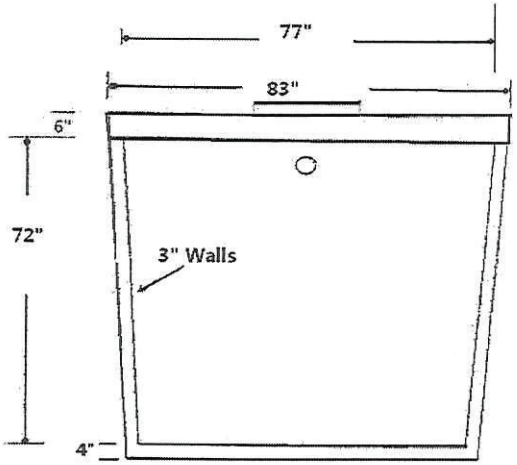

Conditionally APPROVED
DEPARTMENT OF COMMERCE
DIVISION OF SAFETY AND BUILDINGS
SEE CORRESPONDENCE

1,650 Gallon
26.61 Gallons / 1"

1,100 Gallon
17.74 Gallons / 1"

~~20100004~~
20140325

Product # 2750 - 2C

Grove Concrete & Supply INC.
18426 Durand Ave. Po Box 363
Union Grove, Wi. 53182
Ph. 262-878-2030 Fax 262-878-4222
GroveConcrete.com