WLP2000–P
TANK SPECIFICATIONS

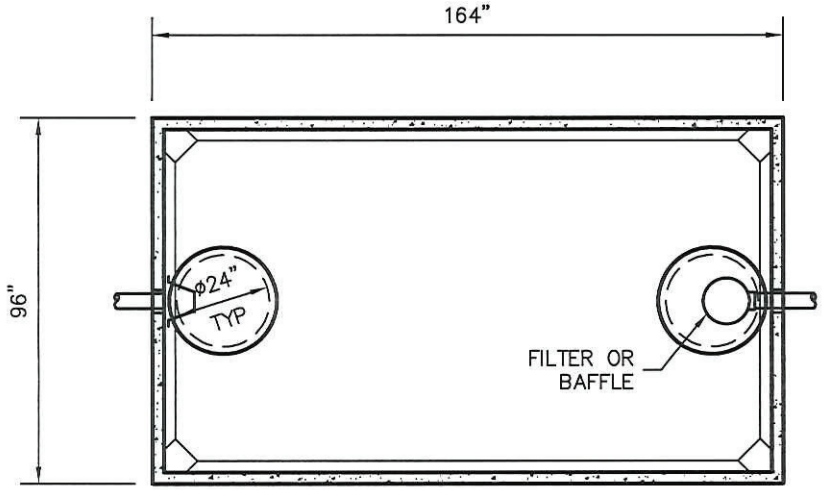

TOP VIEW

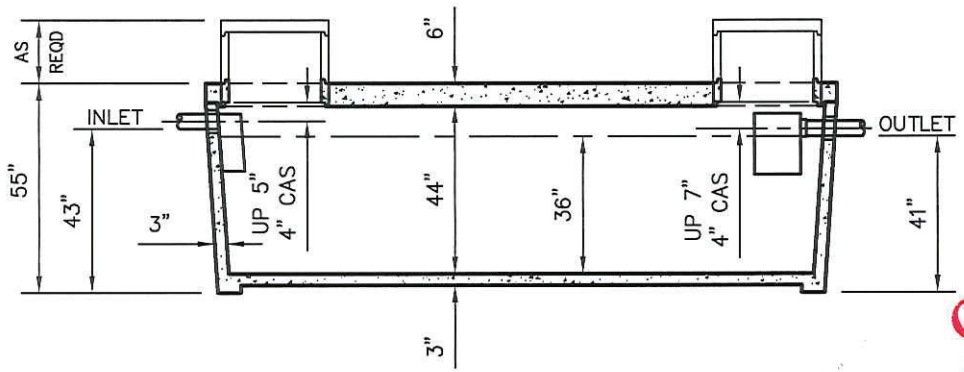

SIDE VIEW

DIMENSIONS:
- WALL: 3"
- BOTTOM: 3"
  - HEAVY – 5"
- COVER: 6"
- MANHOLE: 24" I.D. PRECAST CONCRETE RISER
- HEIGHT: 55" O.D.
- LENGTH: 164" O.D.
- WIDTH: 96" O.D.
- BELOW INLET: 43" O.D.
- LIQUID LEVEL: 36"
- WEIGHT: TANK – 3" BOTTOM 20,700 LBS.
  - TANK – 5" BOTTOM 23,500 LBS.

INLET AND OUTLET:
4" CAST–A–SEAL BOOT OR EQUAL

INLET AND OUTLET BAFFLE AND FILTER:
SEE DETAIL #10

LIQUID CAPACITY: 56.27 GAL/IN

LOADING DESIGN: 8' 0" UNSATURATED SOIL

HOLDING TANK:
OUTLET HOLE PLUGGED
ACTUAL CAPACITY: 2138 GALLONS

TANK CAN BE USED AS:
SEPTIC/ HOLDING/ PUMP OR SIPHON

COVER: MIX DESIGN #8 (NO FIBER)
TANK: MIX DESIGN #9 (SMALL FIBER)

CUSTOMIZED TANKS:
FOR CUSTOM TANKS CONTACT WIESER CONCRETE

Conditionally APPROVED
SEE CORRESPONDENCE
20150001

DRAWINGS SUBMITTED FOR APPROVAL
APPROVED BY: _____
APPROVAL DATE: _____
PRODUCTS NEEDED BY: _____

TANKS ARE MANUFACTURED TO MEET OR EXCEED ASTM C–1227 REQUIREMENTS

PRE–POUR:
POST–POUR:
SCALE: 1/4"=1'-0"
REV.
DATE:
DRAWN BY: WCP
DATE: 00/00/00
FILE: WLP2000-P-3

WIESER CONCRETE
W3716 US HWY 10 MAIDEN ROCK, WI 54750
800–325–8456

WLP2000–P 3" FLOOR
SEPTIC MANUAL

SHEET NO. 1 OF 1

WLP2000–MR
TANK SPECIFICATIONS

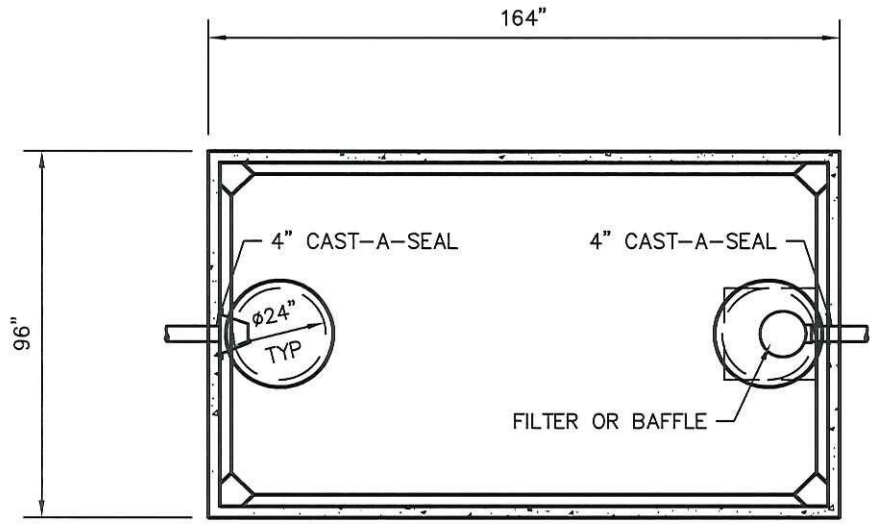

TOP VIEW

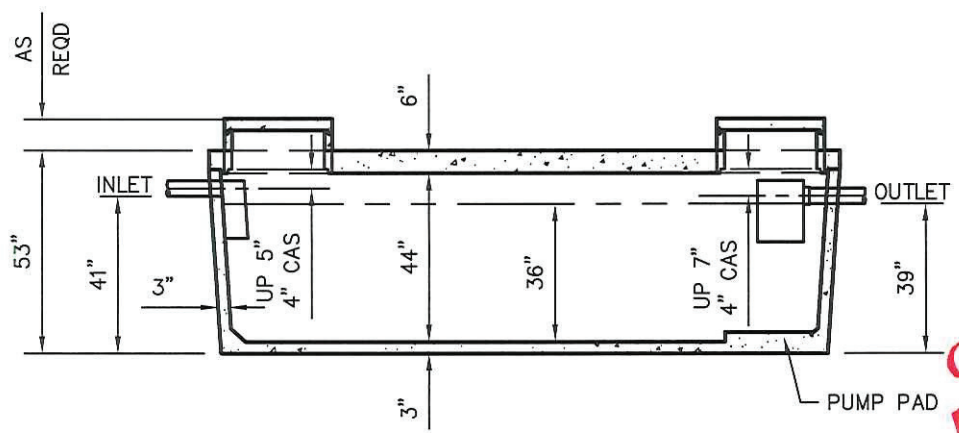

SIDE VIEW

DIMENSIONS:
- WALL: 3"
- BOTTOM: SEPTIC 3"
  - HEAVY DUTY 5" (ADD 2,800 LBS.)
- COVER: 6"
- MANHOLE: 24" I.D. PRECAST CONCRETE RISER
- HEIGHT: 53" O.D.
- LENGTH: 164" O.D.
- WIDTH: 96" O.D.
- BELOW INLET: 41" O.D.
- LIQUID LEVEL: 36"
- WEIGHT: BOTTOM 11,260 LBS.
  - COVER 8,170 LBS.

INLET AND OUTLET:
4" CAST–A–SEAL BOOT OR EQUAL

INLET AND OUTLET BAFFLE AND FILTER:
WISCONSIN, SEE DETAIL #10
(OTHER STATES SEE CHART)

LIQUID CAPACITY: 56.27 GAL/IN

LOADING DESIGN: 8' 0" UNSATURATED SOIL

HOLDING TANK:
OUTLET HOLE PLUGGED
ACTUAL CAPACITY: 2,138 GALLONS

TANK CAN BE USED AS:
SEPTIC/ HOLDING/ PUMP OR SIPHON

COVER: MIX DESIGN #8 (NO FIBER)
TANK: MIX DESIGN #9 (SMALL FIBER)

CUSTOMIZED TANKS:
FOR CUSTOM TANKS CONTACT WIESER CONCRETE

Conditionally APPROVED
SEE CORRESPONDENCE

20150001

DRAWINGS SUBMITTED FOR APPROVAL
APPROVED BY: _____
APPROVAL DATE: _____
PRODUCTS NEEDED BY: _____

TANKS ARE MANUFACTURED TO MEET OR EXCEED ASTM C–1227 REQUIREMENTS

PRE–POUR:
POST–POUR:
SCALE: 1/4"=1'–0"
REV.
DATE:
DRAWN BY: WCP
DATE: 00/00/00
FILE: WLP2000–MR

WIESER CONCRETE
W3716 US HWY 10 MAIDEN ROCK, WI 54750
800–325–8456

WLP2000–MR
SEPTIC MANUAL

SHEET NO. 1 OF 1