NOTE:
1. DOUBLE BUTT WELD SHELL TO HEADS & SEAL WELD STRIKER PLATE.
2. ALL WELDS TO BE LOW PROFILE.
3. REMOVE ALL BB'S & SCARS.
4. PRESSURE TEST TANK UP TO 5 psi.
5. CUT ø4½ HOLD IN HEAD, AFTER TESTING, WITHIN ¼" OF INSIDE PIPE WALL.
6. SWEEP OUT INTERIOR & APPLY ONE COAT OF COAL TAR EPOXY.
7. ABRASIVE BLAST EXTERIOR TO A 2 MIL PROFILE & COAT w/ 100 MILS OF FIBERGLASS PER DURAGLASS SPECIFICATIONS.

BILL OF MATERIALS

| ITEM | QTY. | DESCRIPTION |
|---|---|---|
| A1 | 2 | HEAD, ¼" x 72" O.D. FLANGED |
| A2 | 1 | COIL, ¼" x 72" O.D. x 180" LONG SHELL |
| A3 | 2 | LIFT LUG, SMALL |
| A4 | 1 | PIPE, ø5" x 3" LONG |
| A5 | 1 | MANWAY, ø24" w/ GASKET, NUTS & BOLTS |
| A6 | 1 | STRIKER PLATE, ¼" x 24" x 24" |

20150128

Conditionally APPROVED
SEE CORRESPONDENCE

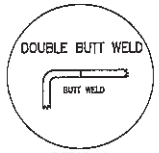

DETAIL A

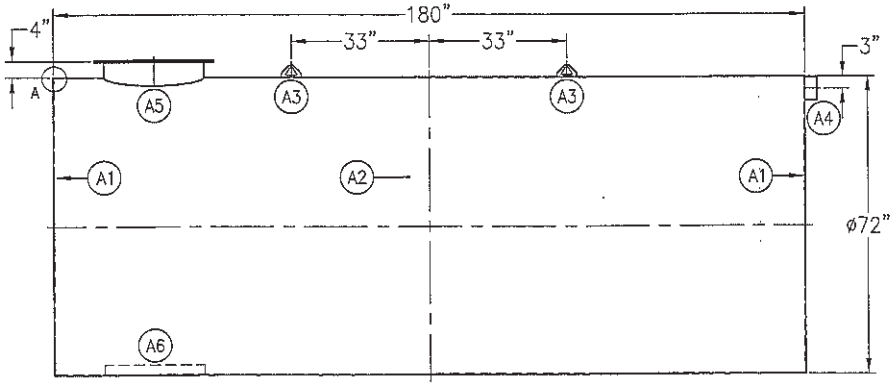

ELEVATION VIEW

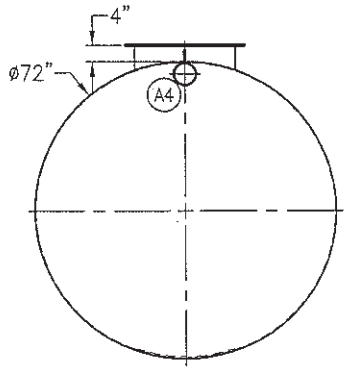

END VIEW

| NO. | DATE | REVISION | INT | APP'D |
|---|---|---|---|---|
| | | | | |
| . | . | . | . | |

THIS DRAWING IS PROPERTY OF LANNON TANK CORP. AND MUST NOT BE COPIED, LOANED, OR DISTRIBUTED WITHOUT WRITTEN PERMISSION. PROPRIETARY – NON FOIA RELEASABLE.

Lannon Tank CORPORATION
20134 Main Street
P.O. Box 516 Lannon, WI 53046
Phone: 1-800-207-7890

TITLE: 6' DIA. x 15' 3,100 GAL. HOLDING TANK

DRN BY: DMS
CHKD BY:
DATE: 05/08/15
SCALE: 1:40

CUSTOMER: –
PO NO: –
DWG NO: MODEL 3100
WEIGHT: 4,305 LBS.
SIZE: "A"
PAGE: 1 OF 1