20150137

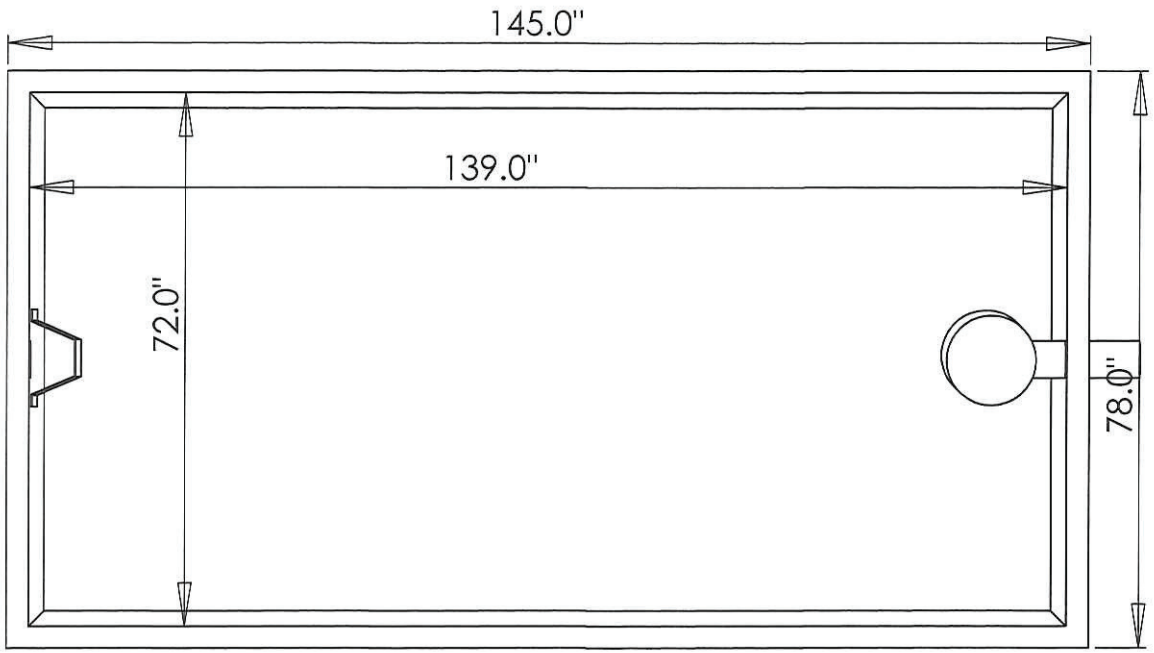

Dalmaray Concrete Products Inc.

Tank Model 2000

Model 2000 Septic, Pump,
Siphon, Holding, or Grease Interceptor

2055 gal. septic
2136 gal. holding

984 GPD WHEN USED AS A SEPTIC TANK
BASED ON 3YR SERVICE INTERVAL

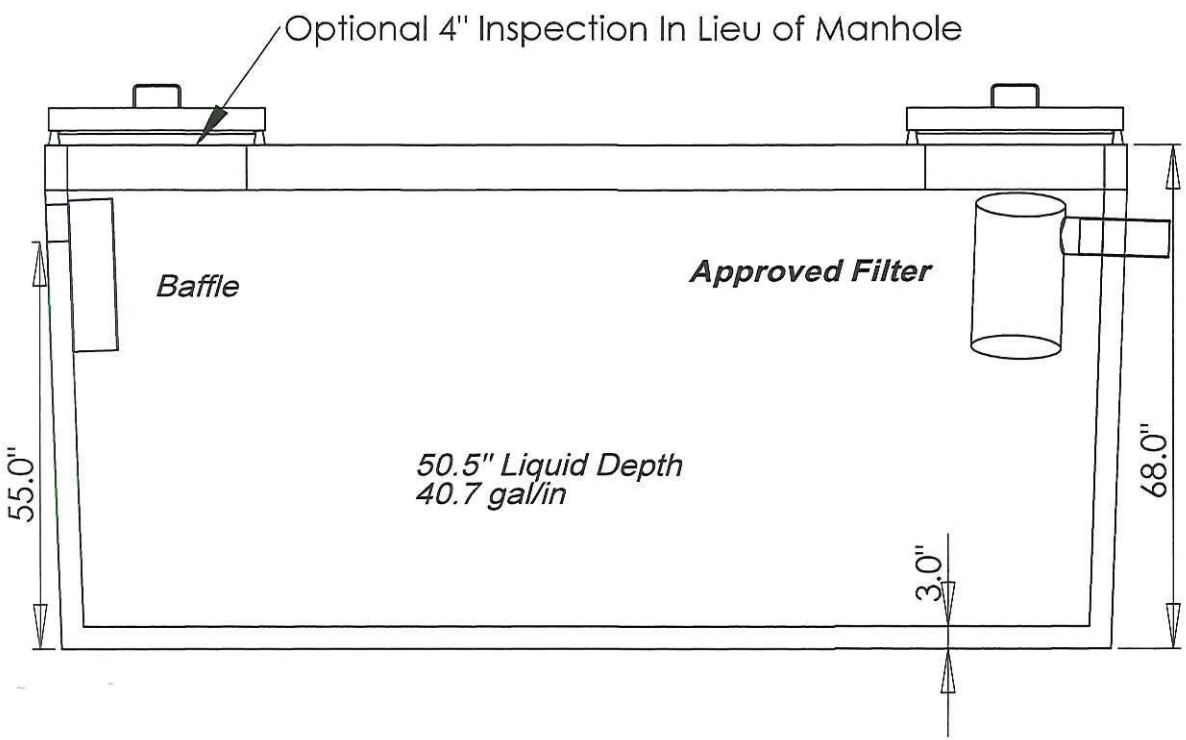

DIMENSIONS:

LENGTH - 145"
WIDTH - 78"
HEIGHT - 68"
BELOW INLET - 55"
TANK WEIGHT - 9600 lb.
LID WEIGHT - 6000 lb.
MAX DEPTH OF BURY 108"

Conditionally APPROVED
SEE CORRESPONDENCE

Dalmaray Concrete Products Inc.

405 S. Arch St.
Janesville, WI 53548
(608)-752-6507
Toll Free:(888)-222-4541
Fax: (608)-752-5671
www.dalmarayconcreteproducts.com
sales@dalmarayconcreteproducts.com