20150222

PROPERTY OF DEL ZOTTO MFG.

MFG. FOR BOB MILLER PRODUCTS & SUPPLY

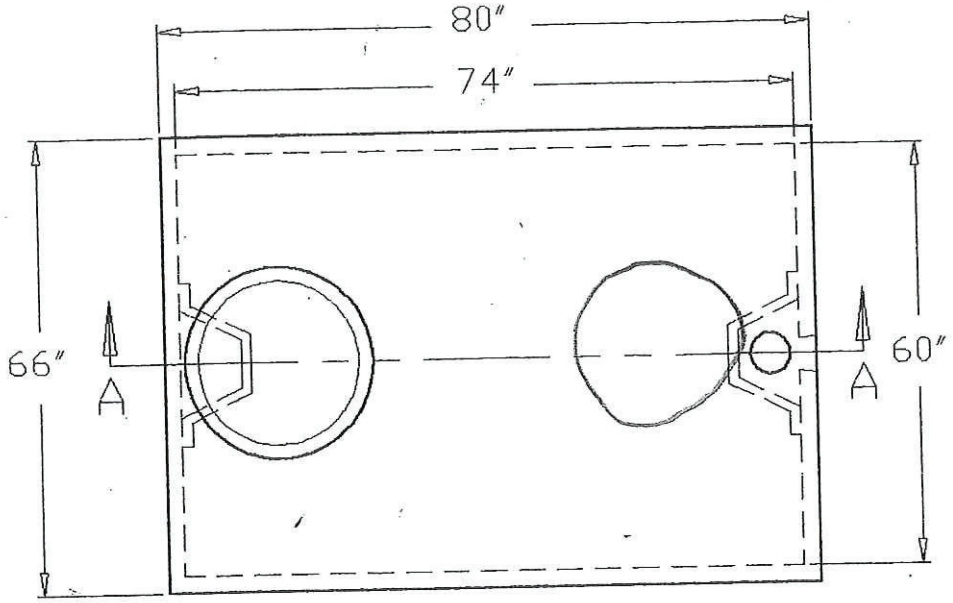

TOP VIEW

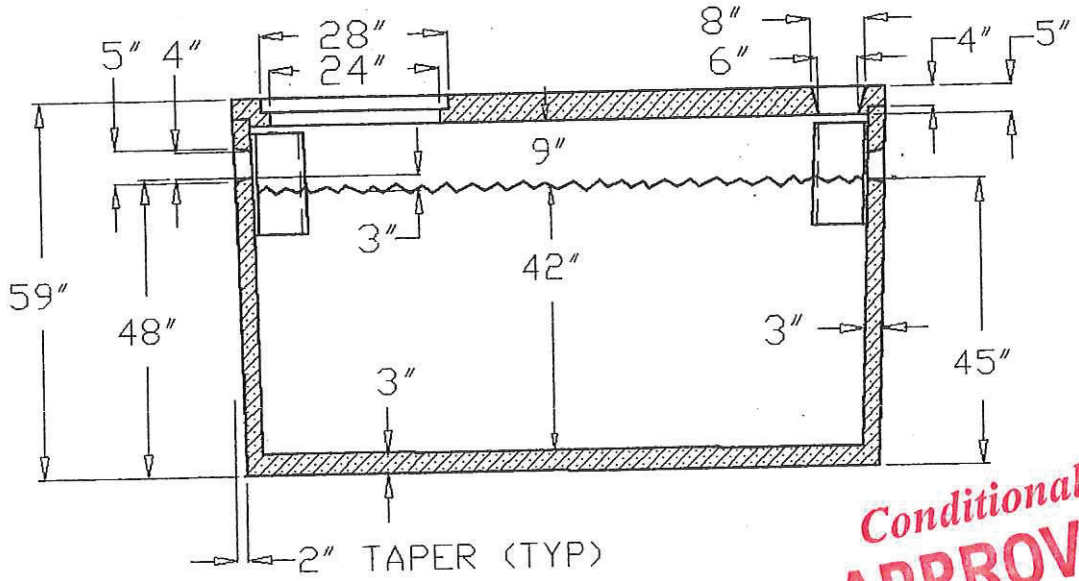

SECTION A-A

Conditionally APPROVED

Glen Jones

SEE CORRESPONDENCE

This drawing and the information contained hereon is the exclusive property of Del Zotto Mfg., Inc., and shall not be reproduced, used, or disclosed to others except as authorized through written consent from Del Zotto Mfg., Inc.

DEL ZOTTO MFG.	
750 GALLON TANK DESIGNED FOR BOB MILLER	
DRAWING #:	MIL-1000
BY: CHRIS S.	DATE: 5/24/91