20150306

~~20100303~~

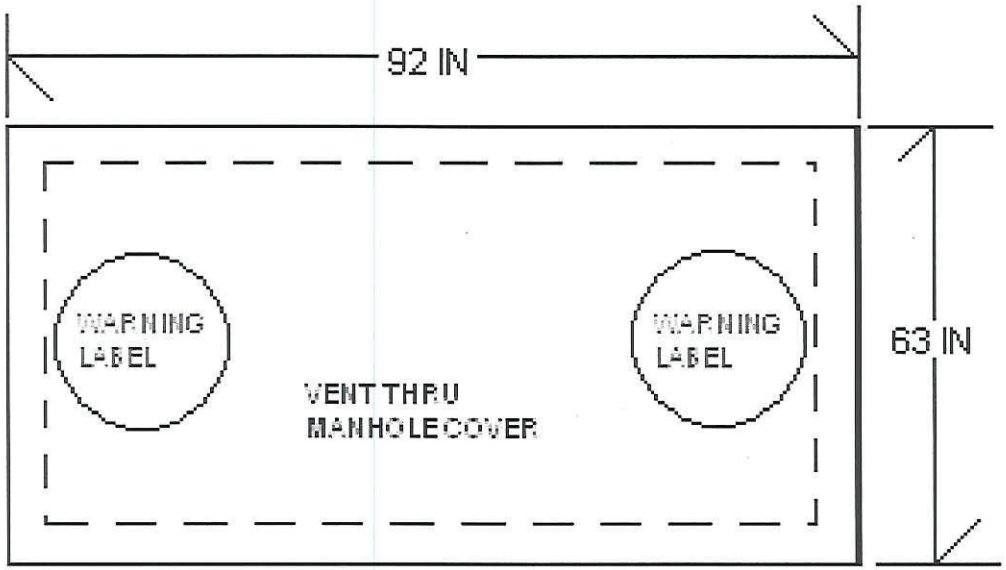

ANTIGO BLOCK CO. INC.
230 MILTON ST
P.O. BOX 34
ANTIGO, WI 54409
(715) 623-4837
(715) 623-5777

Conditionally APPROVED
DEPARTMENT OF COMMERCE
DIVISION OF SAFETY AND BUILDINGS
SEE CORRESPONDENCE

CAPACITY 500 LP GAL

WEIGHT 5024 LBS

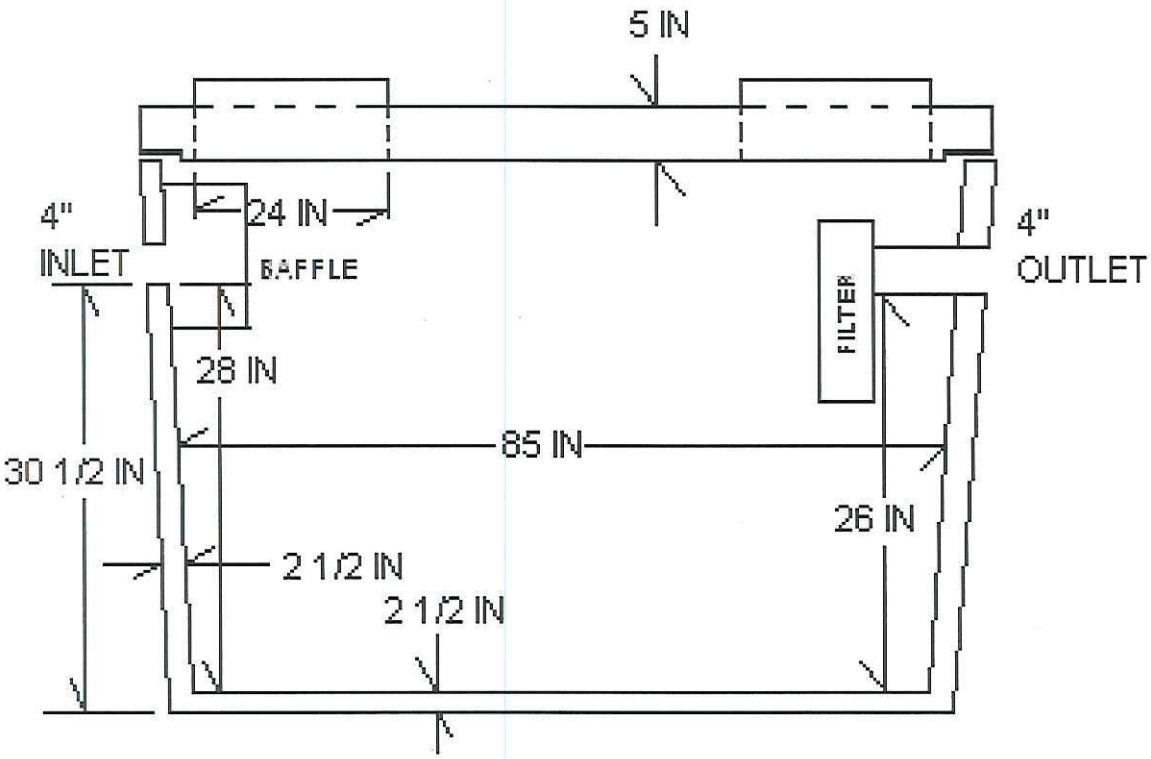

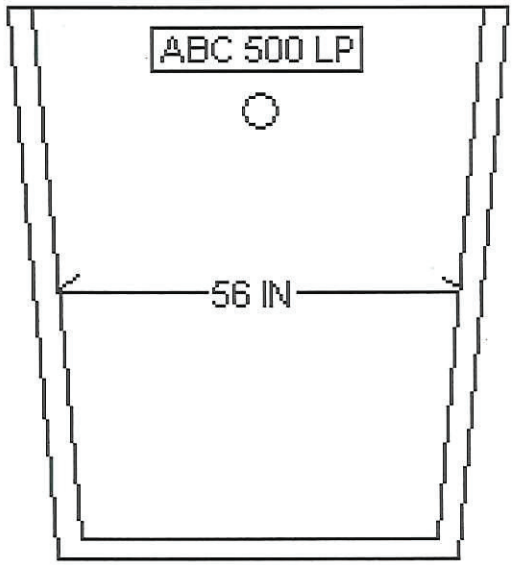

535 gal

256 gpd

20.6 gal/in