20150314
20100401

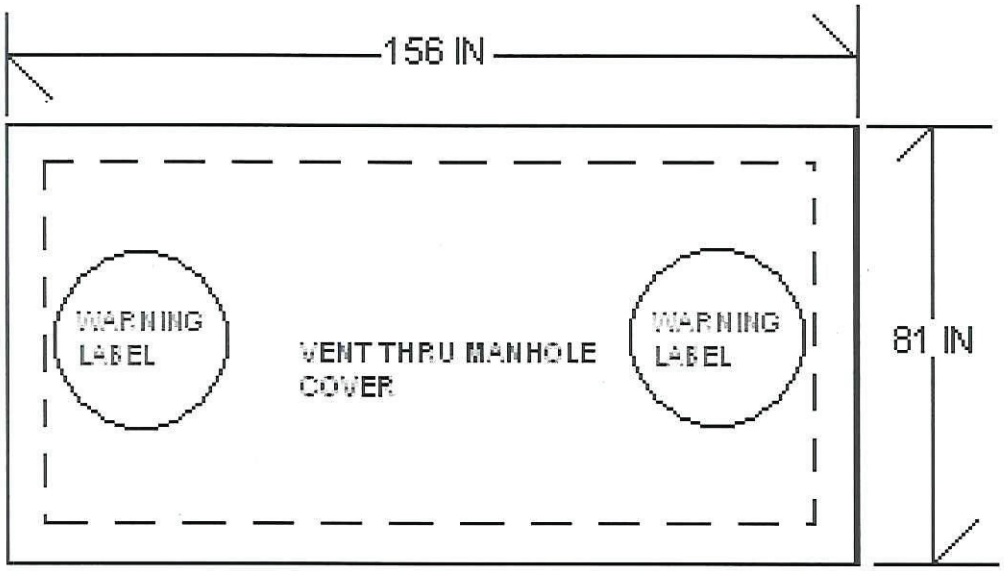

ANTIGO BLOCK CO. INC.
230 MILTON ST
P.O. BOX 34
ANTIGO, WI 54409
(715) 623-4837
(715) 623-5777

Conditionally APPROVED
DEPARTMENT OF COMMERCE
DIVISION OF SAFETY AND BUILDINGS
SEE CORRESPONDENCE

CAPACITY 2500 GAL

WEIGHT 17160 LBS

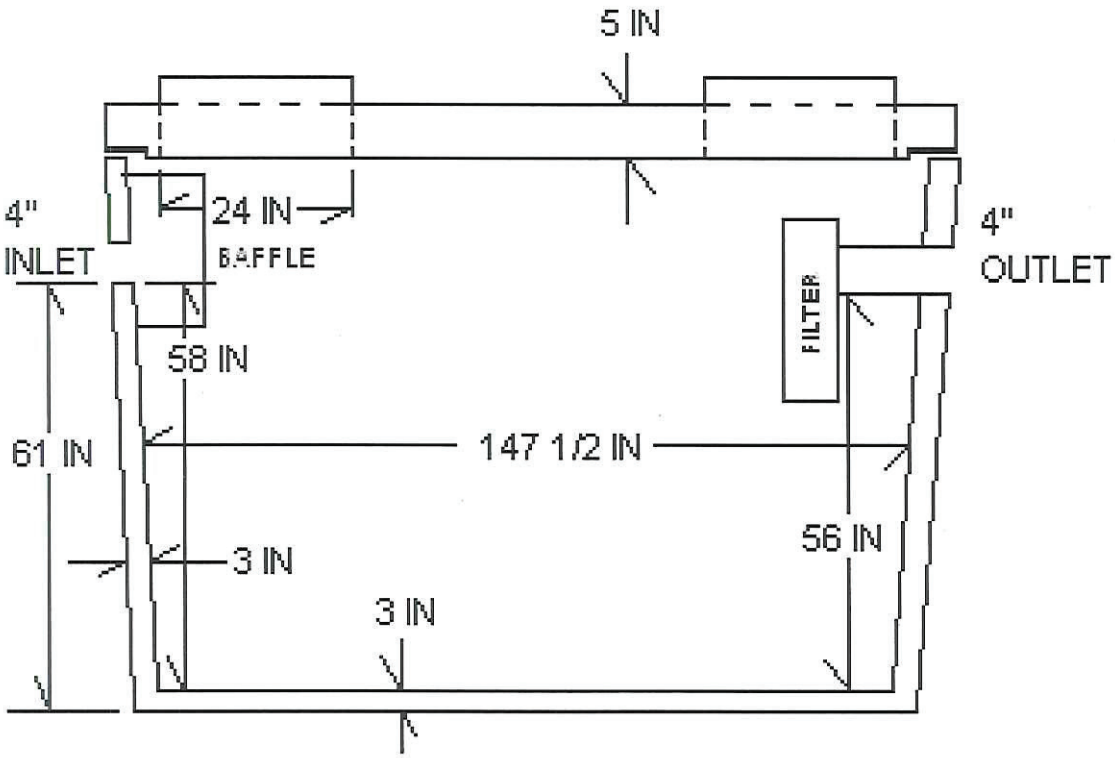

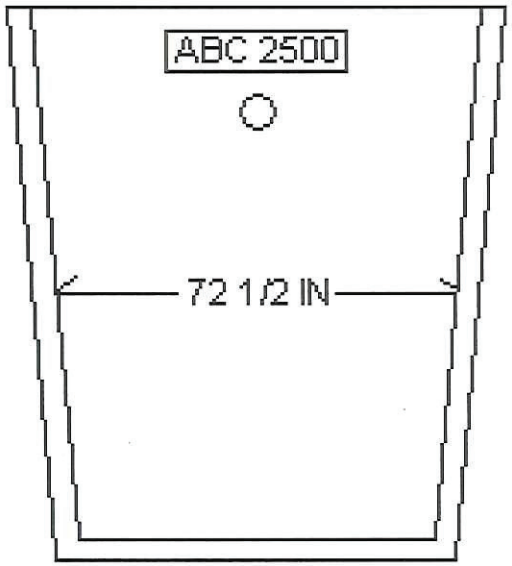

2592 gal
46.3 gal/in
1242 gal/day