W5000 BIO – (2) 3000 GPD MICROFAST ®3.0 OR HIGH STRENGTH FAST®3.0 TANK SPECIFICATIONS

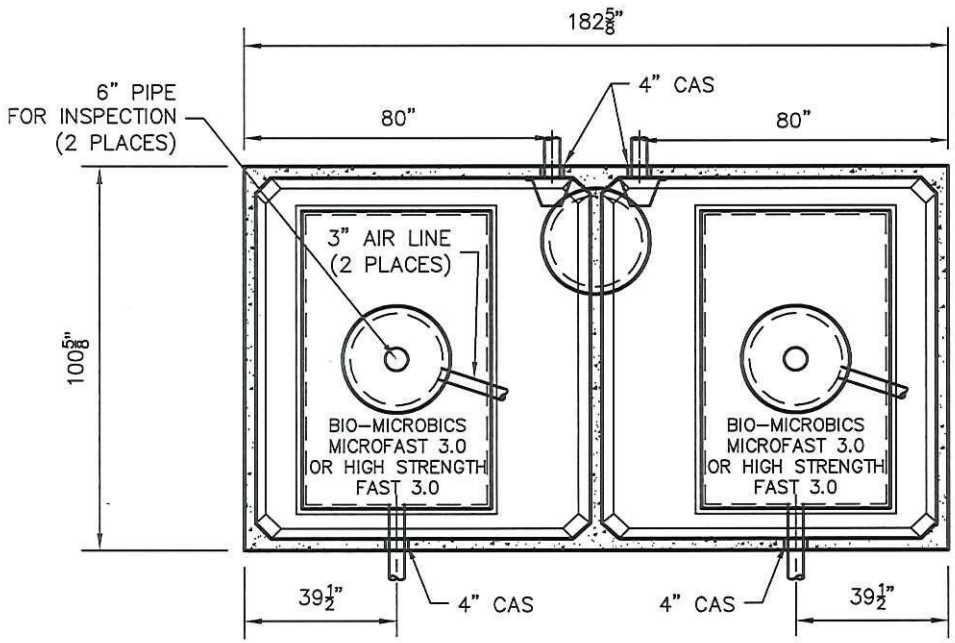

TOP VIEW

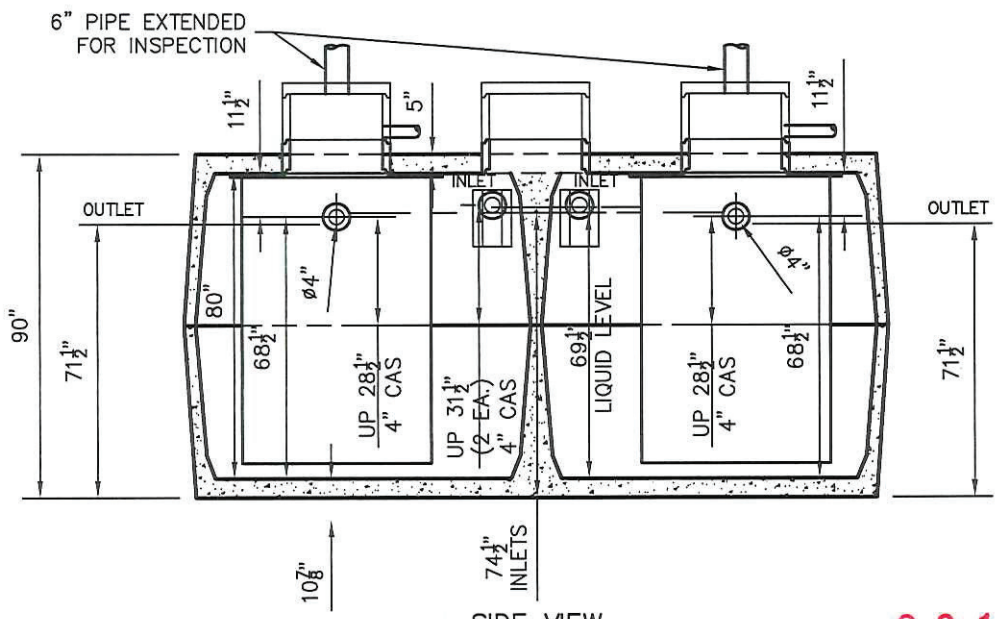

SIDE VIEW

DIMENSIONS:
- WALL: 3"
- BOTTOM: 5"
- COVER: 5"
- MANHOLE: 24" I.D. PRECAST CONCRETE RISER
- HEIGHT: 90" O.D.
- LENGTH: 182–3/4 " O.D.
- WIDTH: 100–3/4 " O.D.
- BELOW INLET: 74 1/2" O.D.
- LIQUID LEVEL: 69 1/2"
- WEIGHT: 14,350 LBS PER SECTION

INLET AND OUTLET:
4" CAST–A–SEAL (CAS) BOOT OR EQUAL

INLET AND OUTLET BAFFLE:
AS SHOWN

LIQUID CAPACITY: 70.06 GAL/IN

LOADING DESIGN: 8'–0" UNSATURATED SOIL

TANK: MIX DESIGN #9 (SMALL FIBER)

CUSTOMIZED TANKS:
FOR CUSTOM TANKS CONTACT WIESER CONCRETE

Conditionally APPROVED
SEE CORRESPONDENCE

20160079

DRAWINGS SUBMITTED FOR APPROVAL
APPROVED BY: _____
APPROVAL DATE: _____
PRODUCTS NEEDED BY: _____

TANKS ARE MANUFACTURED TO MEET OR EXCEED ASTM C–1227 REQUIREMENTS

PRE–POUR: | POST–POUR:
SCALE: 1/4"=1'–0" | REV. DATE:
DRAWN BY: WCP | DATE: 00/00/00
FILE: W5000 BIO HS FAST (2) 3000

WIESER CONCRETE
W3716 US HWY 10 MAIDEN ROCK, WI 54750
800–325–8456

W5000 BIO (2) 3000 GPD
SEPTIC MANUAL

SHEET NO. 1 OF 1

W5000 BIO – 4500 GPD
MICROFAST ®4.5
OR HIGH STRENGTH FAST ®4.5
TANK SPECIFICATIONS

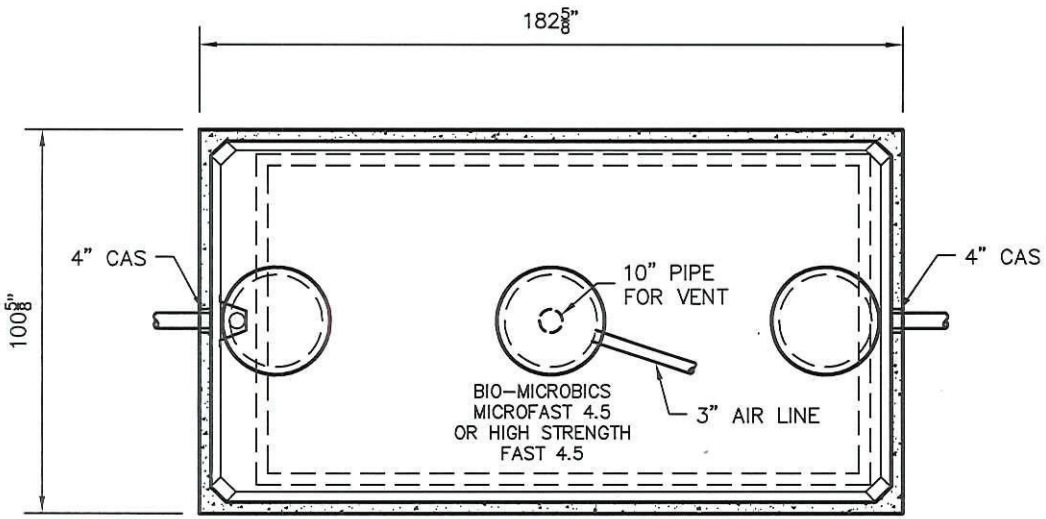

TOP VIEW

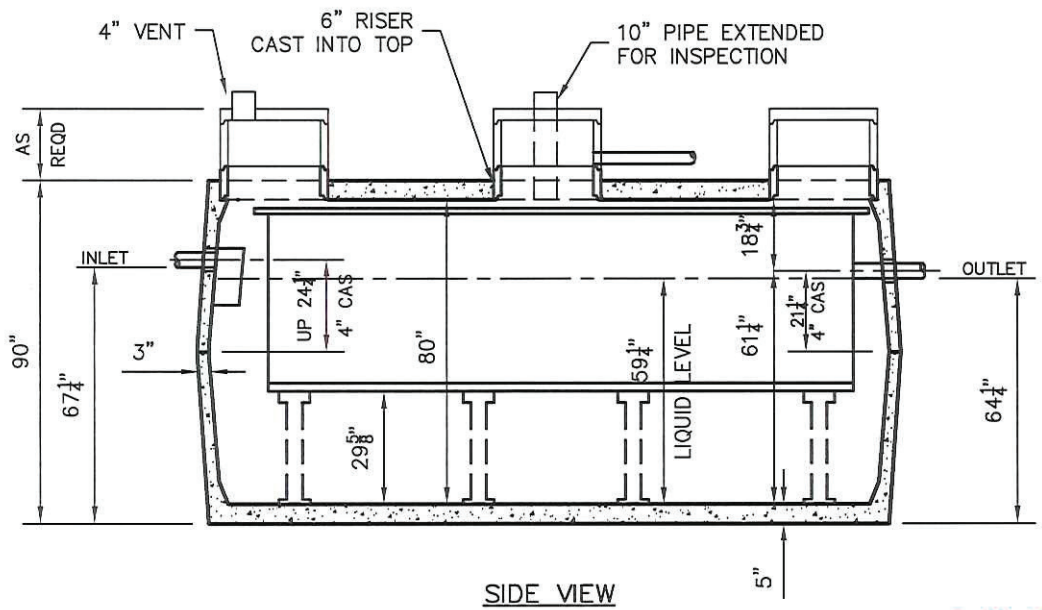

SIDE VIEW

DIMENSIONS:
- WALL: 3"
- BOTTOM: 5"
- COVER: 5"
- MANHOLE: 24" I.D. PRECAST CONCRETE RISER
- HEIGHT: 90" O.D.
- LENGTH: 182–3/4 " O.D.
- WIDTH: 100–3/4 " O.D.
- BELOW INLET: 67 1/4" O.D.
- LIQUID LEVEL: 59 1/4"
- WEIGHT: 14,350 LBS PER SECTION

INLET AND OUTLET:
4" CAST–A–SEAL (CAS) BOOT OR EQUAL

INLET AND OUTLET BAFFLE:
AS SHOWN

LIQUID CAPACITY: 70.06 GAL/IN

LOADING DESIGN: 8'–0" UNSATURATED SOIL

TANK: MIX DESIGN #9 (SMALL FIBER)

CUSTOMIZED TANKS:
FOR CUSTOM TANKS CONTACT WIESER CONCRETE

Conditionally APPROVED
SEE CORRESPONDENCE

20160079

DRAWINGS SUBMITTED FOR APPROVAL
APPROVED BY: _____
APPROVAL DATE: _____
PRODUCTS NEEDED BY: _____

TANKS ARE MANUFACTURED TO MEET OR EXCEED ASTM C–1227 REQUIREMENTS

PRE–POUR:
POST–POUR:
SCALE: 1/4"=1'–0"
REV.
DATE:
DRAWN BY: WCP
DATE: 00/00/00
FILE: W5000 BIO HS FAST 4500

WIESER CONCRETE
W3716 US HWY 10 MAIDEN ROCK, WI 54750
800–325–8456

W5000 BIO 450 GPD
SEPTIC MANUAL

SHEET NO. 1 OF 1