Wendt's Sewer and Excavating, Inc.
Model 1000 Round

Top View

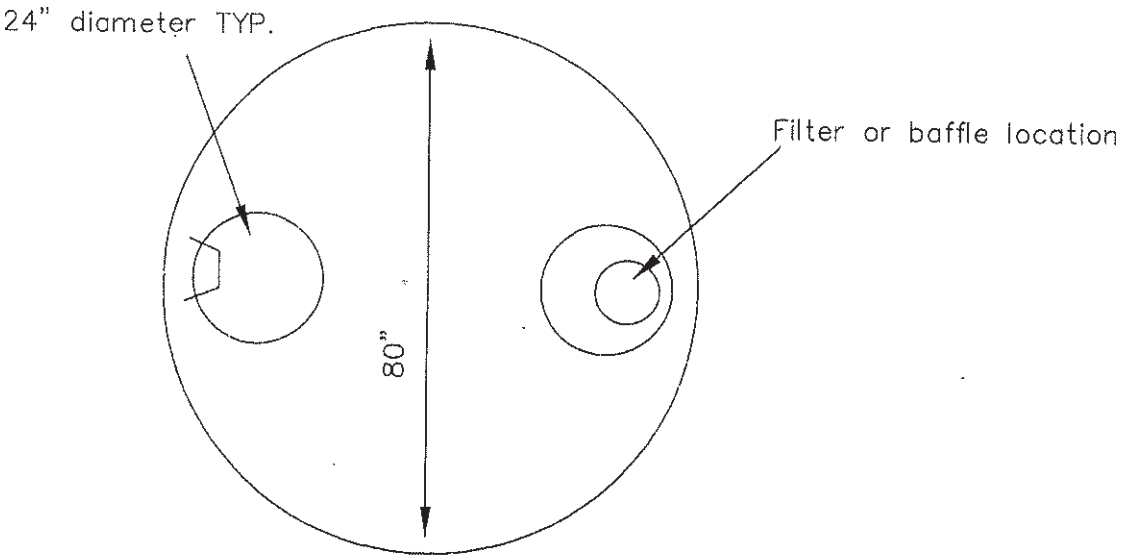

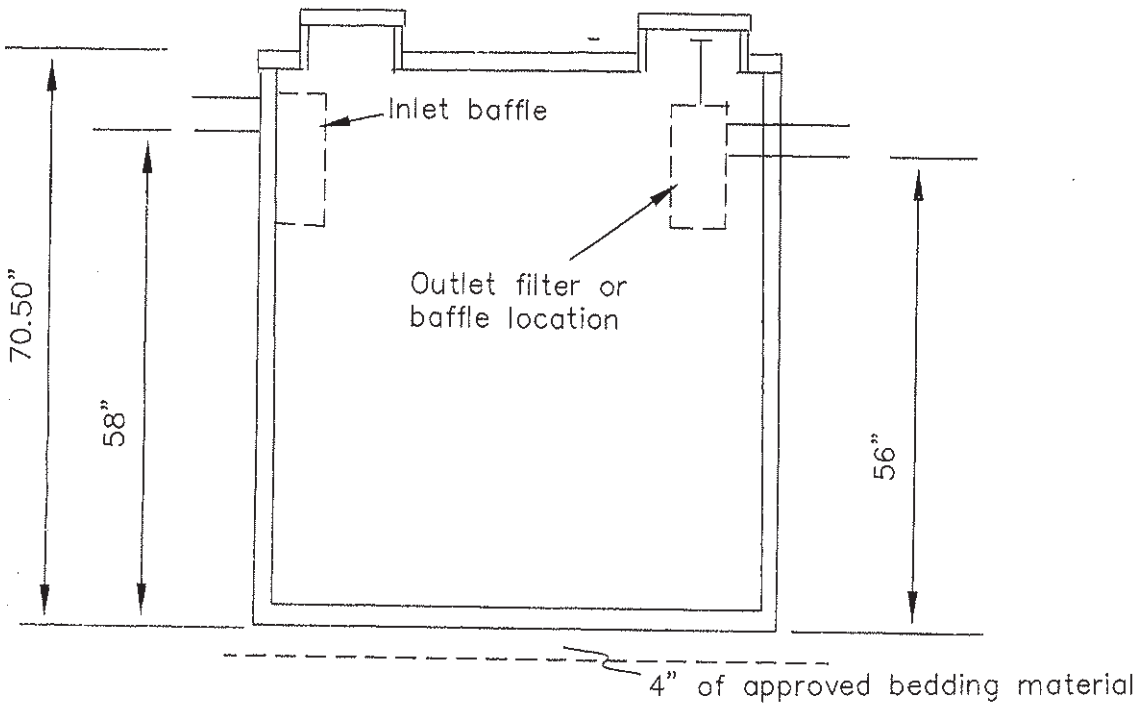

Dimensions and specs

80" Diameter x 70.50" H O.D.
24" I.D. Precast manhole riser
Inlet 58"
Outlet 56"
Liquid Level 53"
Weight 6960 lbs
18.87 Gal/ In.
36" bury depth
Baffles–plastic by Del Zotto
Manhole covers–Precast with warning label

RECEIVED
SEP 15 2016
INDUSTRY SERVICES

20160228

Conditionally
APPROVED

SEE CORRESPONDENCE