MEADE CONCRETE COMPANY LLC

W10440 Cty Rd K, P.O. Box 167 Lodi, WI 53555
(608) 592-3803 FAX (608) 592-3804
info@meadeconcrete.com

20160258

819 GALLON SEPTIC/ 467 GALLON SEPTIC/PUMP/SIPHON COMBINATION TANK

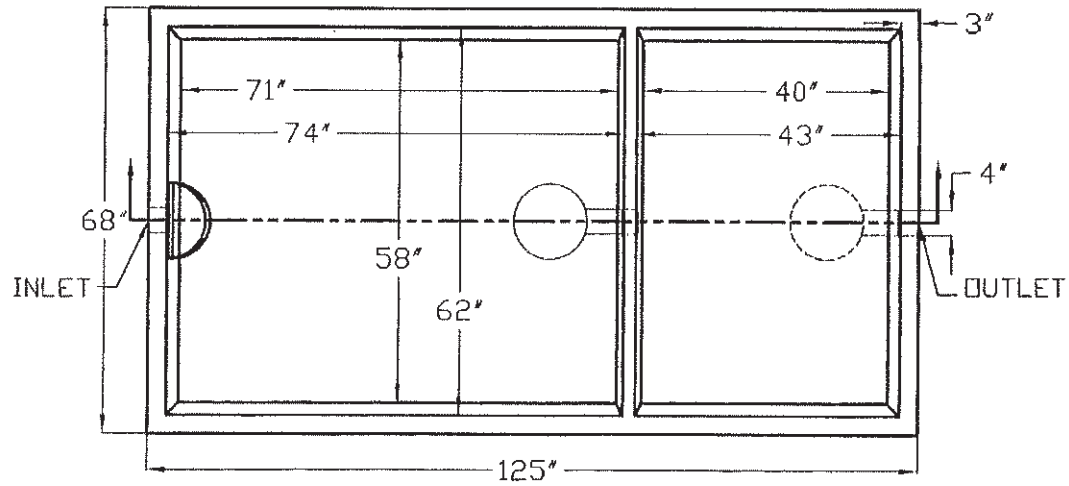

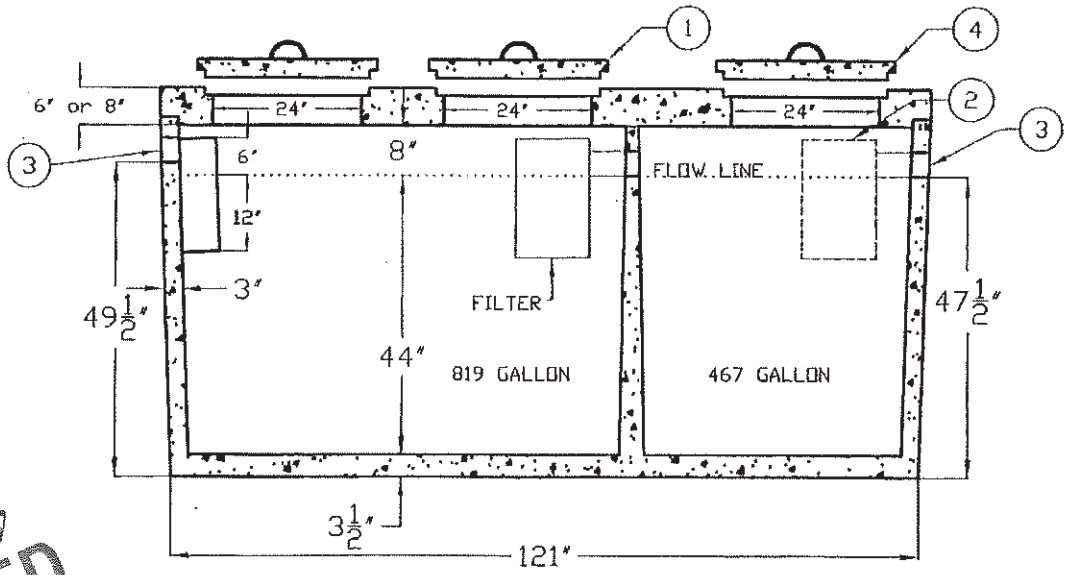

Conditionally APPROVED
SEE CORRESPONDENCE

Note:

1) 24" manhole opening located over the filter when tank is used as a septic/pump tank and a 4" opening is used over baffle when used as septic/septic.
2) Filter is on outlet pipe when the tank is used as a 2-compartment septic tank.
3) 4" press-seal gasket on inlet and outlet.
4) 4" sch. 40 pipe cast into manhole cover for venting on pump, siphon and holding tanks.