MEADE CONCRETE COMPANY LLC

W10440 Cty Rd K, P.O. Box 167 Lodi, WI 53555
(608) 592-3803 FAX (608) 592-3804
info@meadeconcrete.com

20160261

2000 GALLON SEPTIC/PUMP/SIPHON/HOLDING

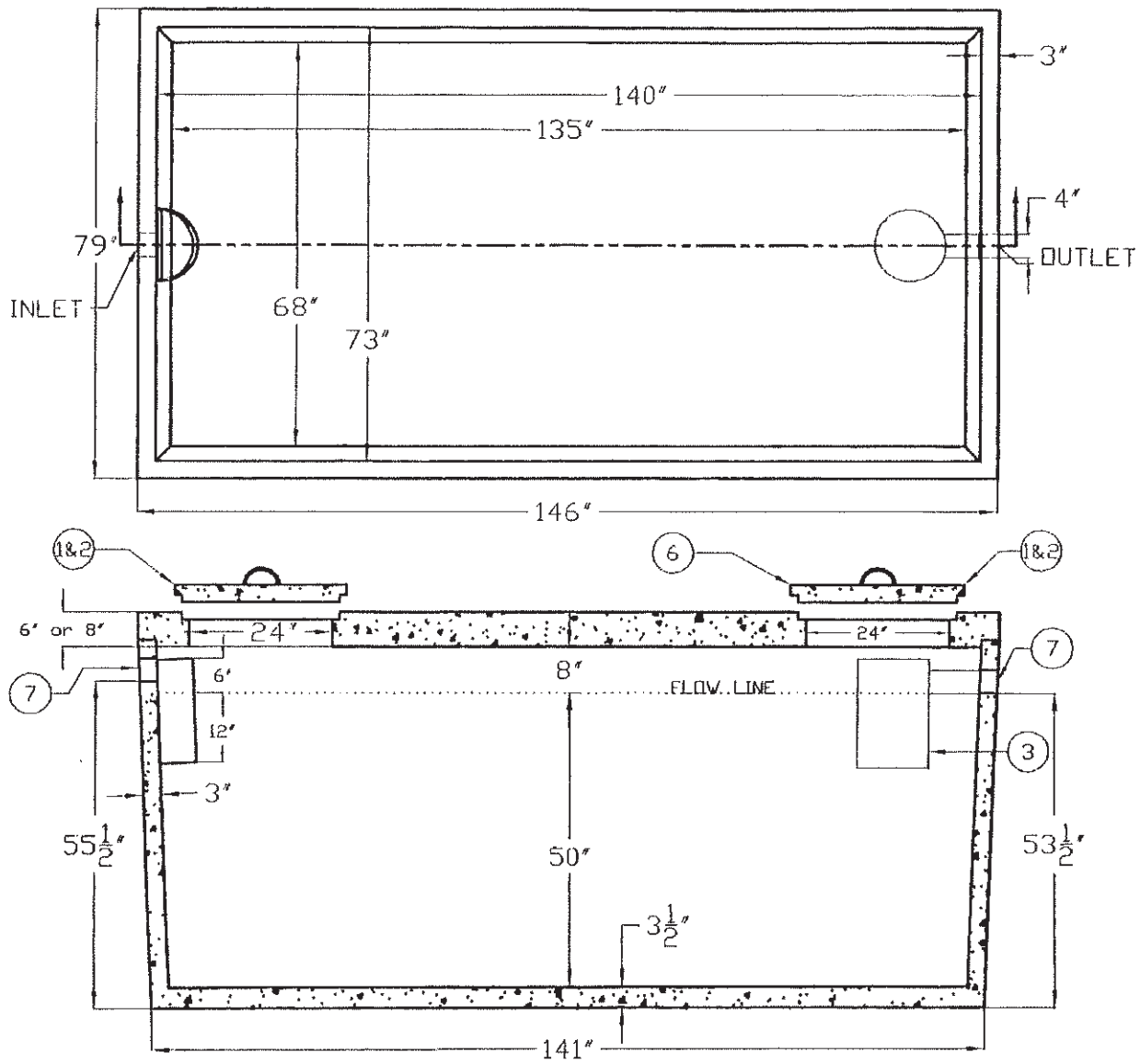

Note:

1) 24" manhole opening over inlet and 4" opening over outlet only for holding tanks.
2) 4" opening over inlet and 24" manhole opening over outlet for pump and siphon tanks.
3) Baffle or filter are not required for pump, siphon, or holding tanks.
4) Tank can only be used as septic tank when it is not the first unit in a series of tanks.
5) Inlet is taken in thru a 1 foot manhole rise pipe with 4" press-seal gasket.
6) 4" Sch 40 pipe cast into manhole cover for venting on pump, siphon and holding tanks.
7) 4" Press-seal gasket on inlet and outlet.

Conditionally APPROVED
CORRESPONDENCE